LRB-2021-18
Planning Application – 21/00277/FLL – Erection of a dwellinghouse, land 170 metres north west of Tom Na Moine, Acharn

INDEX

(a) Papers submitted by the Applicant ***(Pages 167-178)***

(b) Decision Notice ***(Pages 181-182)***

Report of Handling ***(Pages 183-192)***

Reference Documents ***(Pages 193-304)***

(c) Representations ***(Pages 305-314)***

LRB-2021-18
Planning Application – 21/00277/FLL – Erection of a dwellinghouse, land 170 metres north west of Tom Na Moine, Acharn

PAPERS SUBMITTED BY THE APPLICANT

Pullar House 35 Kinnoull Street Perth PH1 5GD Tel: 01738 475300 Fax: 01738 475310 Email: onlineapps@pkc.gov.uk

Applications cannot be validated until all the necessary documentation has been submitted and the required fee has been paid.

Thank you for completing this application form:

ONLINE REFERENCE 100366194-002

The online reference is the unique reference for your online form only. The Planning Authority will allocate an Application Number when your form is validated. Please quote this reference if you need to contact the planning Authority about this application.

Applicant or Agent Details

Are you an applicant or an agent? * (An agent is an architect, consultant or someone else acting on behalf of the applicant in connection with this application) ☐ Applicant ☒ Agent

Agent Details

Please enter Agent details

Company/Organisation:	CASA		
Ref. Number:		You must enter a Building Name or Number, or both: *	
First Name: *	Colin	Building Name:	Treetops
Last Name: *	Smith	Building Number:	
Telephone Number: *	01887 820815	Address 1 (Street): *	Dull
Extension Number:		Address 2:	
Mobile Number:		Town/City: *	Aberfeldy
Fax Number:		Country: *	Perthshire
		Postcode: *	PH15 2JQ
Email Address: *	colin@casarchitect.co.uk		

Is the applicant an individual or an organisation/corporate entity? *

☒ Individual ☐ Organisation/Corporate entity

Applicant Details

Please enter Applicant details

Title:	Mr	You must enter a Building Name or Number, or both: *	
Other Title:		Building Name:	Stobhall House
First Name: *	Antoni S	Building Number:	
Last Name: *	Flotats	Address 1 (Street): *	Stobhall
Company/Organisation		Address 2:	
Telephone Number: *		Town/City: *	Perth
Extension Number:		Country: *	Perthshire
Mobile Number:		Postcode: *	PH2 6DR
Fax Number:			
Email Address: *	colin@casarchitect.co.uk		

Site Address Details

Planning Authority:	Perth and Kinross Council

Full postal address of the site (including postcode where available):

Address 1:	
Address 2:	
Address 3:	
Address 4:	
Address 5:	
Town/City/Settlement:	
Post Code:	

Please identify/describe the location of the site or sites

Northing	742803	Easting	272813

Description of Proposal

Please provide a description of your proposal to which your review relates. The description should be the same as given in the application form, or as amended with the agreement of the planning authority: *
(Max 500 characters)

Erection of replacement dwelling house, Land 170 Metres North West of Tom Na Moine, Acharn, Aberfeldy

Type of Application

What type of application did you submit to the planning authority? *

☒ Application for planning permission (including householder application but excluding application to work minerals).

☐ Application for planning permission in principle.

☐ Further application.

☐ Application for approval of matters specified in conditions.

What does your review relate to? *

☒ Refusal Notice.

☐ Grant of permission with Conditions imposed.

☐ No decision reached within the prescribed period (two months after validation date or any agreed extension) – deemed refusal.

Statement of reasons for seeking review

You must state in full, why you are a seeking a review of the planning authority's decision (or failure to make a decision). Your statement must set out all matters you consider require to be taken into account in determining your review. If necessary this can be provided as a separate document in the 'Supporting Documents' section: * (Max 500 characters)

Note: you are unlikely to have a further opportunity to add to your statement of appeal at a later date, so it is essential that you produce all of the information you want the decision-maker to take into account.

You should not however raise any new matter which was not before the planning authority at the time it decided your application (or at the time expiry of the period of determination), unless you can demonstrate that the new matter could not have been raised before that time or that it not being raised before that time is a consequence of exceptional circumstances.

See attached Supporting Statement

Have you raised any matters which were not before the appointed officer at the time the Determination on your application was made? * ☐ Yes ☒ No

If yes, you should explain in the box below, why you are raising the new matter, why it was not raised with the appointed officer before your application was determined and why you consider it should be considered in your review: * (Max 500 characters)

Please provide a list of all supporting documents, materials and evidence which you wish to submit with your notice of review and intend to rely on in support of your review. You can attach these documents electronically later in the process: * (Max 500 characters)

Supporting Statement to Notice of Review

Application Details

Please provide the application reference no. given to you by your planning authority for your previous application.

21/00277/FLL

What date was the application submitted to the planning authority? *

15/03/2021

What date was the decision issued by the planning authority? *

13/04/2021

Review Procedure

The Local Review Body will decide on the procedure to be used to determine your review and may at any time during the review process require that further information or representations be made to enable them to determine the review. Further information may be required by one or a combination of procedures, such as: written submissions; the holding of one or more hearing sessions and/or inspecting the land which is the subject of the review case.

Can this review continue to a conclusion, in your opinion, based on a review of the relevant information provided by yourself and other parties only, without any further procedures? For example, written submission, hearing session, site inspection. *

☐ Yes ☒ No

Please indicate what procedure (or combination of procedures) you think is most appropriate for the handling of your review. You may select more than one option if you wish the review to be a combination of procedures.

Please select a further procedure *

By means of inspection of the land to which the review relates

Please explain in detail in your own words why this further procedure is required and the matters set out in your statement of appeal it will deal with? (Max 500 characters)

The decision was based on the location of the application site in comparison to the site of the existing house to be replaced, it is therefore the applicants opinion that the site should be visited.

In the event that the Local Review Body appointed to consider your application decides to inspect the site, in your opinion:

Can the site be clearly seen from a road or public land? * ☒ Yes ☐ No

Is it possible for the site to be accessed safely and without barriers to entry? * ☒ Yes ☐ No

Checklist – Application for Notice of Review

Please complete the following checklist to make sure you have provided all the necessary information in support of your appeal. Failure to submit all this information may result in your appeal being deemed invalid.

Have you provided the name and address of the applicant?. * ☒ Yes ☐ No

Have you provided the date and reference number of the application which is the subject of this review? * ☒ Yes ☐ No

If you are the agent, acting on behalf of the applicant, have you provided details of your name and address and indicated whether any notice or correspondence required in connection with the review should be sent to you or the applicant? * ☒ Yes ☐ No ☐ N/A

Have you provided a statement setting out your reasons for requiring a review and by what procedure (or combination of procedures) you wish the review to be conducted? * ☒ Yes ☐ No

Note: You must state, in full, why you are seeking a review on your application. Your statement must set out all matters you consider require to be taken into account in determining your review. You may not have a further opportunity to add to your statement of review at a later date. It is therefore essential that you submit with your notice of review, all necessary information and evidence that you rely on and wish the Local Review Body to consider as part of your review.

Please attach a copy of all documents, material and evidence which you intend to rely on (e.g. plans and Drawings) which are now the subject of this review * ☒ Yes ☐ No

Note: Where the review relates to a further application e.g. renewal of planning permission or modification, variation or removal of a planning condition or where it relates to an application for approval of matters specified in conditions, it is advisable to provide the application reference number, approved plans and decision notice (if any) from the earlier consent.

Declare – Notice of Review

I/We the applicant/agent certify that this is an application for review on the grounds stated.

Declaration Name: Mr Colin Smith

Declaration Date: 13/05/2021

Erection of a dwelling house
Land 170 Metres North West of Tom Na Moine
Acharn
Aberfeldy

For Mr Antoni S Flotats

Planning Application Reference: 21/00277/FLL

SUPPORTING STATEMENT to
NOTICE of REVIEW

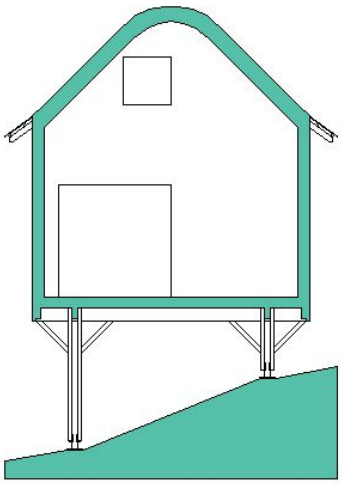

casa

colin . andrew . smith . architect
treetops . dull .
aberfeldy . perthshire . PH15 2JQ
01887 820815
colin@casarchitect.co.uk

1. INTRODUCTION

1.1. This statement should be read in conjunction with the Notice of Review submitted on behalf of Mr Antoni S Flotats for the Erection of a dwelling house, Land 170 Metres North West of Tom Na Moine, Acharn, Aberfeldy. The planning application, (21/00277/FLL), was refused by Perth and Kinross Council on 13th April 2021.

1.2. The proposal sought Planning Permission to Replace an existing derelict house.

1.3. We strongly contest the council's reasons for refusal of the planning application, as it is the applicant's opinion that is complies with Category (4) Renovation or Replacement of Houses of Policy 19 in the Perth and Kinross Local development Plan 2019.

2. PERTH AND KINROSS COUNCILS REASON FOR REFUSAL

2.1. The refusal notice states: **'The proposal is contrary to Policy 19 of the Perth and Kinross Local Development Plan 2019 and the Council's Housing in the Countryside Supplementary Guidance 2020 as the proposal fails to comply with Category 4 Renovation or Replacement of Houses as the site of the new dwellinghouse is substantially remote from the ruinous dwelling it is proposed to replace. The proposal also fails to satisfy any of the remaining categories (1) Building Groups, (2) Infill Sites, (3) New Houses in the Open Countryside, (5) Conversion or Replacement of Redundant Non Domestic Buildings and (6) Rural Brownfield of the Housing in the Countryside Supplementary Guidance 2020.'**

2.2. This report does not intend to contest Categories (1) Building Groups, (2) Infill Sites, (3) New Houses in the Open Countryside, (5) Conversion or Replacement of Redundant Non Domestic Buildings and (6) Rural Brownfield of the *Housing in the Countryside Policy 19* as it is accepted that the proposal does not meet any of these categories.

2.3. The applicant however contests the refusal under Category (4) Renovation or Replacement of Houses and that the application does comply with this policy.

2.4. The planning officer in his *Report of Handling* of the application states in the section titled **'Principle'** that **'It is accepted that there is sufficient evidence of the existing ruinous building to enable its size and form to be identified'** From this statement it is therefore taken that the principle of replacing the existing house is found to be acceptable to Category (4) of Policy 19.

2.5. With the report stating that the Principle of a replacement house is acceptable the reason for the refusal against Policy (4) is then stated in the *Report of Handling* as **'the proposal does not seek to replace the existing building on the same or a similar site, the new house is proposed on a site which is located 335 metres east of the existing building.'** This is the crux of the refusal and the one this report intends to refute.

2.6. The *Housing in the Countryside Supplementary Guidance 2020* gives further detail as to what is acceptable under Category (4). It states **'If an alternative position is sought, or the proposed house is to be of a significantly different scale, this should be justified in a supporting planning and design statement.'.** This suggests that it is acceptable to have the replacement house situated in a different location but offers no further criteria.

2.7. A *Planning Policy Statement* was submitted as part of the application which justifies the change in position. We intend to make the following comments to further clarify this statement

2.8. The overriding reason for changing the site position is that the proposed site has a better landscape fit than that of the existing house position:

2.8.1 The existing house does not have an access in place and therefore a new access would have to be made from the public road negotiating sloping topography and level differences, unlike the proposed site where the access already exists complying with the road standards for geometry and visibility.
2.8.2 The new house position has excellent mature existing tree screening between the house and the public road offering an immediate visual setting.
2.8.3 The new site has an existing flat area ideal for constructing the replacement dwelling. Rather than the existing site which has challenging sloping topography.
2.8.4 The existing house sits very close to the public road which would offer very little appropriate amenity space due to this proximity. The new site allows this distance to be extended and therefore good levels of amenity akin to the pattern of development along the South Tay Road.

All these reasons above afford for a better landscape fit. This requirement is further required in *The Housing in the Countryside Supplementary Guidance 2020* where under the more detailed section for Category (4) it states **'The siting of the new house should be similar to that of the existing building in terms of orientation and distance from the road, unless individual site conditions suggest that another position would create a better landscape fit.'** This suggests that changing the site location is a positive step to provide the necessary landscape fit. This has been fully discussed in the *Planning Policy Statement* and it is the applicants considered opinion that the replacement position therefore meets with policy.

2.9. The Planning officer suggests that **'It is, however, expected that the replacement dwelling be located within the same site, or perhaps in some cases on an immediately adjacent site in order to meet the requirements of this part of the policy.'** If this is the expectation of policy, it equally would be expected that the Housing in the Countryside Policy and Guidance would identify this provision. The reason for the *Housing in the Countryside Guidance* is to provide interpretation and clarification of policy 19 of the *Local Development Plan*, it is unsatisfactory to have further unwritten criteria which is not available to applicants.

2.10. The Planning officer further suggests that the council **'has also recently successfully defended appeals to the Local Review Body on this basis.'** It might be that applications have been refused due to the remote position from the replaced house, however each application should be judged on its own merits against policy and guidance. The guidance quoted above states **'individual site conditions'** suggesting that every application should be considered independently as no application or site is identical. The change of site in this application will simply provide a better landscape fit.

2.11. The Planning Officer is concerned that a decision to approve would result in a **'dangerous precedent'.** As above if objective reasoning is applied and each case considered separately against policy, this does not offer a precedent, the guidance quoted above is clear that **'individual site conditions'** be considered. There is not a planning policy in the Development Plan which backs a position that an application should be determined dependent on whether it creates a future precedent.

2.12. Other factors with regards design of the replacement house has all been met with a positive response in the *Report of Handling* where it states that **'Overall, the design and scale of the house is considered to be acceptable and to accord with policies 1A and B of the LDP2 and the siting criteria outlined in the Housing in the Countryside Guide.'**

3. CONCLUSIONS

3.1. The proposed application seeks to replace an existing derelict house, the principle of which has been accepted to comply with policy except for the remote location of the proposed site.

3.2. The applicant is aggrieved that the planning authorities opinion on the suitability of the site has not been based on policy or guidance, but instead formed on unwritten advice.

3.3. The applicant believes that the new site is a more suitable site than the existing due to the landscape setting improvements, which complies with the requirements of the *Housing in the Countryside Supplementary Guidance* under Category (4) which specifically states that that change of site is acceptable if it were to **'create a better landscape fit.'**

3.4. Whilst the applicant has no doubt that an equally sensitive house could be designed for the existing site, to the same extent it makes no objective sense. Further consideration of the application is required taking cognisance off the site proposed with its existing access, its existing planted screening from the public road, its more appropriate amenity and its existing flat area, all good reasons to change the site position. The applicant seeks the Local Review Body to consider the above compelling reasons and overturn the decision for refusal.

House to be Replaced from the East

House to be Replaced from the West

Access to Application site from East

Existing Screening from Public Road

Looking towards Public Road From Site

Existing Access from Public Road

LRB-2021-18
Planning Application – 21/00277/FLL – Erection of a dwellinghouse, land 170 metres north west of Tom Na Moine, Acharn

PLANNING DECISION NOTICE

REPORT OF HANDLING

REFERENCE DOCUMENTS

PERTH & KINROSS COUNCIL

Communities Service

Mr Antoni S Flotats
c/o CASA
Colin Smith
Treetops
Dull
PH15 2JQ

Pullar House
35 Kinnoull Street
PERTH
PH1 5GD

Date of Notice: **13th April 2021**

TOWN AND COUNTRY PLANNING (SCOTLAND) ACT

Application Reference: **21/00277/FLL**

I am directed by the Planning Authority under the Town and Country Planning (Scotland) Acts currently in force, to refuse your application registered on 15th March 2021 for Planning Permission for **Erection of a dwellinghouse Land 170 Metres North West Of Tom Na Moine Acharn**

David Littlejohn
Head of Planning and Development

Reasons for Refusal

1 The proposal is contrary to Policy 19 of the Perth and Kinross Local Development Plan 2019 and the Council's Housing in the Countryside Supplementary Guidance 2020 as the proposal fails to comply with Category 4 Renovation or Replacement of Houses as the site of the new dwellinghouse is substantially remote from the ruinous dwelling it is proposed to replace. The proposal also fails to satisfy any of the remaining categories (1) Building Groups, (2) Infill Sites, (3) New Houses in the Open Countryside, (5) Conversion or Replacement of Redundant Non Domestic Buildings and (6) Rural Brownfield of the Housing in the Countryside Supplementary Guidance 2020.

Justification

The proposal is not in accordance with the Development Plan and there are no material reasons which justify departing from the Development Plan.

Notes

The plans and documents relating to this decision are listed below and are displayed on Perth and Kinross Council's website at www.pkc.gov.uk "Online Planning Applications" page

Plan Reference

01

02

03

04

05

06

07

08

09

10

REPORT OF HANDLING

DELEGATED REPORT

Ref No	**21/00277/FLL**	
Ward No	**P4- Highland**	
Due Determination Date	**14th May 2021**	
Draft Report Date	**13th April 2021**	
Report Issued by	**JW**	**Date 13 April 2020**

PROPOSAL: Erection of a dwellinghouse

LOCATION: Land 170 Metres North West Of Tom Na Moine Acharn

SUMMARY:

This report recommends **refusal** of the application as the development is considered to be contrary to the relevant provisions of the Development Plan and there are no material considerations apparent which justify setting aside the Development Plan.

DATE OF SITE VISIT: 23 March 2021

SITE PHOTOGRAPHS

BACKGROUND AND DESCRIPTION OF PROPOSAL

Full planning permission is sought for the erection of a bespoke architecturally designed dwelling house on a site on the south side of Loch Tay. The site was previously commercial woodland and the site has been felled under a restocking obligation with new planting carried out over the last 10 years. The application site is effectively a hardstanding plateau which is accessed from the south from the South Loch Tay Road with an existing access track in place which travels down the slope towards the shore of Loch Tay. To the north the land slopes away from the site down towards Loch Tay. There is an area of existing planting along the southern boundary of the site with the public road.

The house is proposed to sit to the north of the existing hardstanding area with the northern portion of the house sitting on stilts above the sloping land. The house is proposed to have an L shaped footprint with the main living areas proposed on the northern most part of the site which is proposed to open out onto a large external terrace which will extend over the sloping land. The eastern wing of the house is to accommodate a total of four bedrooms. Externally the house is proposed to be finished in blackened larch cladding with a natural zinc roof.

The site is located within the Loch Tay Special Landscape Area (SLA)

SITE HISTORY

None

PRE-APPLICATION CONSULTATION

Pre application Reference: None undertaken

NATIONAL POLICY AND GUIDANCE

The Scottish Government expresses its planning policies through The National Planning Framework, the Scottish Planning Policy (SPP), Planning Advice Notes (PAN), Creating Places, Designing Streets, National Roads Development Guide and a series of Circulars.

DEVELOPMENT PLAN

The Development Plan for the area comprises the TAYplan Strategic Development Plan 2016-2036 and the Perth and Kinross Local Development Plan 2 (2019).

TAYplan Strategic Development Plan 2016 – 2036 - Approved October 2017

Whilst there are no specific policies or strategies directly relevant to this proposal the overall vision of the TAYplan should be noted. The vision states *"By 2036 the TAYplan area will be sustainable, more attractive, competitive and vibrant without creating an unacceptable burden on our planet. The quality of life will make it a place of first choice where more people choose to live, work, study and visit, and where businesses choose to invest and create jobs."*

Perth and Kinross Local Development Plan 2 – Adopted November 2019

The Local Development Plan 2 (LDP2) is the most recent statement of Council policy and is augmented by Supplementary Guidance.

The principal policies are:

Policy 1A: Placemaking

Policy 1B: Placemaking

Policy 2: Design Statements

Policy 5: Infrastructure Contributions

Policy 19: Housing in the Countryside

Policy 39: Landscape

Policy 40B: Forestry, Woodland and Trees: Trees, Woodland and Development

Policy 41: Biodiversity

Policy 47: River Tay Catchment Area

Policy 52: New Development and Flooding

Policy 53B: Water Environment and Drainage: Foul Drainage

Policy 53C: Water Environment and Drainage: Surface Water Drainage

Policy 55: Nuisance from Artificial Light and Light Pollution

Policy 60B: Transport Standards and Accessibility Requirements: New Development Proposals

OTHER POLICIES

Supplementary Guidance – Landscape

Supplementary Guidance – Housing in the Countryside

Supplementary Guidance – Developer Contributions and Affordable Housing

CONSULTATION RESPONSES

INTERNAL

Environmental Health (Private Water) – no objection subject to conditions

Transport Planning – no objection subject to conditions

Development Contributions Officer – no contribution required

Environmental Health (Noise Odour) – no objection subject to conditions

EXTERNAL

None

REPRESENTATIONS

None received

ADDITIONAL STATEMENTS

Screening Opinion	Not Required
Environmental Impact Assessment (EIA): Environmental Report	Not Required
Appropriate Assessment	AA Not Required
Design Statement or Design and Access Statement	Submitted
Report on Impact or Potential Impact	Supporting Planning Statement

APPRAISAL

Sections 25 and 37 (2) of the Town and Country Planning (Scotland) Act 1997 require that planning decisions be made in accordance with the development plan unless material considerations indicate otherwise. The Development Plan for the area comprises the approved TAYplan and the adopted LDP2.

The determining issues in this case are whether; the proposal complies with development plan policy; or if there are any other material considerations which justify a departure from policy.

Principle

The local plan through Policy 6 - Settlement Boundaries specifies that development will not be permitted, except within the defined settlement boundaries which are defined by a settlement boundary in the Plan.

However, through Policy 19 - Housing in the Countryside it is acknowledged that opportunities do exist for housing in rural areas to support the viability of communities, meet development needs in appropriate locations while safeguarding the character of the countryside as well as ensuring that a high standard of siting and design is achieved. Thus the development of single houses or groups of houses which fall within the six identified categories will be supported where they comply with criterion as indicated in the Housing in the Countryside Supplementary Guidance (SG).

Having had the opportunity to assess the plans the application does not relate to:-

(1) Building groups.
(2) Infill sites.
(3) New Houses in the Open Countryside
(5) Conversion or replacement of redundant non-domestic buildings.
(6) Development on Rural Brownfield.

The submission claims that the proposal is for a replacement dwellinghouse. The submission references an existing stone built building which is located to the west but outwith of the application site but in the ownership of the applicant. The stone building is located immediately adjacent to the public road. The submission claims

that the position of the former dwellinghouse is constrained by its location immediately adjacent to the public road and that forming an access and private amenity space is considered to be challenging. It also references the ruins proximity to powerlines. On that basis the proposal seeks to "replace" the house on a site which is remote from the existing building. Category 4 of the guidance states that the replacement of a ruinous house will be permitted where there is substantial evidence of the structure to enable its size and form to be identified, it is located on an established site with a good setting and "fit" in the landscape and it has existing/established site boundaries which are capable of providing enclosure for the new house. It also states that where an alternative position for the new house is sought or it is to be of a significantly different scale this has to be justified.

It is accepted that there is sufficient evidence of the existing ruinous building to enable its size and form to be identified. The existing ruin is clearly that a small, likely single storey cottage building. Looking first at the scale of the proposed house. The proposed dwelling is substantially larger than the ruinous building it is proposed to replace. The SG states that the scale of the new house will normally be similar to that of the existing building. The proposal seeks to erect a substantially larger dwelling than the existing ruinous building which does not appear to have been justified in the supporting information.

More importantly, however, the proposal does not seek to replace the existing building on the same or a similar site, the new house is proposed on a site which is located 335 metres east of the existing building. As such it cannot be considered to be a "replacement" of the existing dwelling. Given that the site is located 335 metres away there is considered to be little or no discernible relationship between the application site and the ruinous building other than the sites being with the same ownership. It is noted that the guidance does allow for a new house to be located in an alternative position where this will mean the proposed development has a better landscape fit. It is, however, expected that the replacement dwelling be located within the same site, or perhaps in some cases on an immediately adjacent site in order to meet the requirements of this part of the policy. This issue has been discussed directly with the Strategy and Policy Team who prepared the Supplementary Guidance. There is expected to be a direct relationship between the two sites and the Council has been consistent in ensuring there is a direct relationship between an existing and proposed site when applying the "replacement house" criteria of the Supplementary Guidance. It has also recently successfully defended appeals to the Local Review Body on this basis.

In this case there appears to be no relationship between the existing ruin and the proposed replacement dwelling other than they happen to be under the same land ownership. The fact that it would not be possible to see the existing ruin from the proposed new site emphasises this point. Whilst the design is considered to be of high quality and appropriate to its setting, as outlined in more detail below, the principle of relocating a dwelling to a site which is over 300 metres away from the existing site is not considered to be appropriate. Furthermore allowing a dwelling to be "replaced" on this basis is considered to set a dangerous precedent for the relocation of development onto new sites where development did not previously exist and moves away entirely from the entire principle and ethos of "replacing" a dwelling under this part of the SG. The design of the dwelling is considered to be appropriate for its overall setting on the banks of Loch Tay, however its scale is substantially

larger than the building it is proposed to replace. Therefore, a proposal may be looked upon more favourably for a smaller dwelling on a site which has a more direct relationship with the ruinous building.

On that basis the proposal cannot be considered under category 4 "Replacement" and therefore requires to be considered against the other categories of development in the Housing in the Countryside Supplementary Guidance. The proposal is not located within a building group, is not an infill site, does not meet any of the criteria for new houses in the open countryside, does not involve the conversion or replacement of a redundant non domestic building and the site is not brownfield.

Therefore, the proposal fails to meet any of the six categories of development outlined within the Housing in the Countryside Guide and therefore is contrary to Policy 19 of the Perth and Kinross Council Local Development Plan 2019 (LDP2).

Site Layout

The proposed dwellinghouse is significantly larger in footprint than the existing ruinous house located to the west and therefore extends way beyond the footprint of the existing modest building. The house is proposed to have an L shaped layout which allows for an external courtyard to the south of the dwelling for a private garden area with south facing aspect. The north of the house extends over the sloping land with an external terrace proposed to take account of views over Loch Tay.

The layout of the house also takes the form and layout of a traditional U shaped steading building and is therefore considered appropriate. The layout of the site is considered to be appropriate and makes best use of the land available in accordance with policy.

Design and Layout and Landscape Impact

The house is proposed to be bespoke in design with a series of pods proposed in order to break up the mass and bulk of a house with a relatively large footprint. It is to be set over one level and has been broken into a number of parts, reducing the perceived bulk of what is a relatively large dwelling. Therefore the building will appear as a collection of smaller buildings similar to historic groupings which can be seen around Loch Tay. The contemporary take on a traditional farm grouping is considered to respect the visual amenity of the area. The house proposes to use simple high quality finishing materials with a zinc roof and larch cladding on the walls which will ensure the house has a relatively recessive finish when seen on wider views from Loch Tay and the opposite shores of Loch Tay. The individual pods are proposed to be linked with flat roof sections which will have a turf finish on the roof to enhance bio diversity value. The site is open to the north and therefore the design requires to be carefully considered to respect the fact that the site will be open given the wish to retain the important views. The overall design, form, massing and materials for the house are considered to be acceptable in the context of this site and the house been designed to reflect a small rural grouping of buildings which is characteristic of this location.

Overall, the design and scale of the house is considered to be acceptable and to accord with policies 1A and B of the LDP2 and the siting criteria outlined in the Housing in the Countryside Guide. Furthermore, the design is considered to meet the requirements of policy relating to landscaping impact given the sites location within the Loch Tay Special Landscape Area as it will appear as a small grouping of farm buildings as is common on the north side of the South Loch Tay Road. Should any permission be granted a condition requiring the submission of a lighting scheme for the site should be applied to ensure any lighting is as limited as possible to limit the impact on the landscape and visual amenity during night time hours.

Nevertheless, the principle of development of the site is considered to be contrary to the LDP2.

Residential Amenity

The house is in a remote location and therefore is not considered to result in any impact on residential amenity. There is ample garden ground to serve the proposed dwelling.

The proposal includes an Air Source Heat Pump (ASHP) and therefore Environmental Health (EH) have been consulted on the potential impact of noise from the ASHP. A condition has been recommended to ensure that any noise from the ASHP meets specific levels in the interests of residential amenity.

EH also recommended that an informative be applied to any permission to ensure the proposed stove system is operated in accordance with manufacturers discussions in the interests of protecting air quality.

There are therefore considered to be no issues relating to residential amenity.

Drainage and Flooding

The house is proposed to connect to a private drainage system which is complies with the requirements of policy 53B of the LDP2. The submission also indicates that surface water will be catered for by a SUDS system which accords with the requirements of Policy 53C. There are no flood risk issues associated with the site given its elevated nature.

Roads and Access

The proposal requires to meet the criteria outlined in the National Roads Development Guide (NRDG) in relation to parking provision and turning facilities. The site plan indicates the provision of a single access from South Loch Tay Road with ample parking and turning facilities within the site. Transport Planning have been consulted and consider the development to be acceptable in terms of road safety subject to conditions relating to the design of the access. Subject to these conditions the proposal is considered to comply with Policy 60B of the LDP2 and the requirements of the NRDG.

Landscaping and Bio Diversity

The proposed development site is a part area of hardstanding and an access which has little biodiversity value. There are opportunities to enhance the site for biodiversity through planting native trees and shrub species in a proposed landscaping plan. The site is also relatively well contained by existing planting but this can be augmented. This could be secured by a planning condition should permission be granted. A condition could also be added to ensure the provision of bird boxes within the development.

The site is considered to be a sufficient distance from the River Tay Special Area of Conservation (SAC) to ensure it would not be impacted upon by the proposed development.

Private Water Supplies

The development is for a dwelling house in a rural area with private water supplies believed to serve properties in the vicinity. To ensure the new development has an adequate and consistently wholesome supply of water and to maintain water quality and supply in the interests of residential amenity and ensure the private water supply or septic drainage systems of neighbours of the development remain accessible for future maintenance conditions and informatives are recommended from the Council's Private Water Team.

Developer Contributions

Education

The Council Developer Contributions Supplementary Guidance requires a financial contribution towards increased primary school capacity in areas where a primary school capacity constraint has been identified. A capacity constraint is defined as where a primary school is operating at over 80% and is likely to be operating following completion of the proposed development, extant planning permissions and Local Development Plan allocations, at or above 100% of total capacity.

This proposal is within the catchment of Kenmore Primary School.

Education & Children's Services have no capacity concerns in this catchment area at this time and therefore no education contribution is required.

Economic Impact

The economic impact of the proposal is likely to be minimal and limited to the construction phase of the development.

PLANNING OBLIGATIONS AND LEGAL AGREEMENTS

None required.

DIRECTION BY SCOTTISH MINISTERS

None applicable to this proposal.

CONCLUSION AND REASONS FOR DECISION

To conclude, the application must be determined in accordance with the adopted Development Plan unless material considerations indicate otherwise. In this respect, the proposal is considered to be contrary to the Development Plan. Account has been taken of the relevant material considerations and none has been found that would justify overriding the adopted Development Plan.

Accordingly, the proposal is refused on the grounds identified below:

Reasons

The proposal is contrary to Policy 19 of the Perth and Kinross Council Local Development Plan 2019 and the Council's Housing in the Countryside Supplementary Guidance 2020 as the proposal fails to comply with Category 4 Renovation or Replacement of Houses as the site of the new dwellinghouse is substantially remote from the ruinous dwelling it is proposed to replace. The proposal also fails to satisfy any of the remaining categories (1) Building Groups, (2) Infill Sites, (3) New Houses in the Open Countryside, (5) Conversion or Replacement of Redundant Non Domestic Buildings and (6) Rural Brownfield of the Housing in the Countryside Supplementary Guidance 2020.

Justification

The proposal is not in accordance with the Development Plan and there are no material reasons which justify departing from the Development Plan.

Informatives

None

Procedural Notes

Not Applicable.

PLANS AND DOCUMENTS RELATING TO THIS DECISION

01	06
02	07
03	08
04	09
05	10

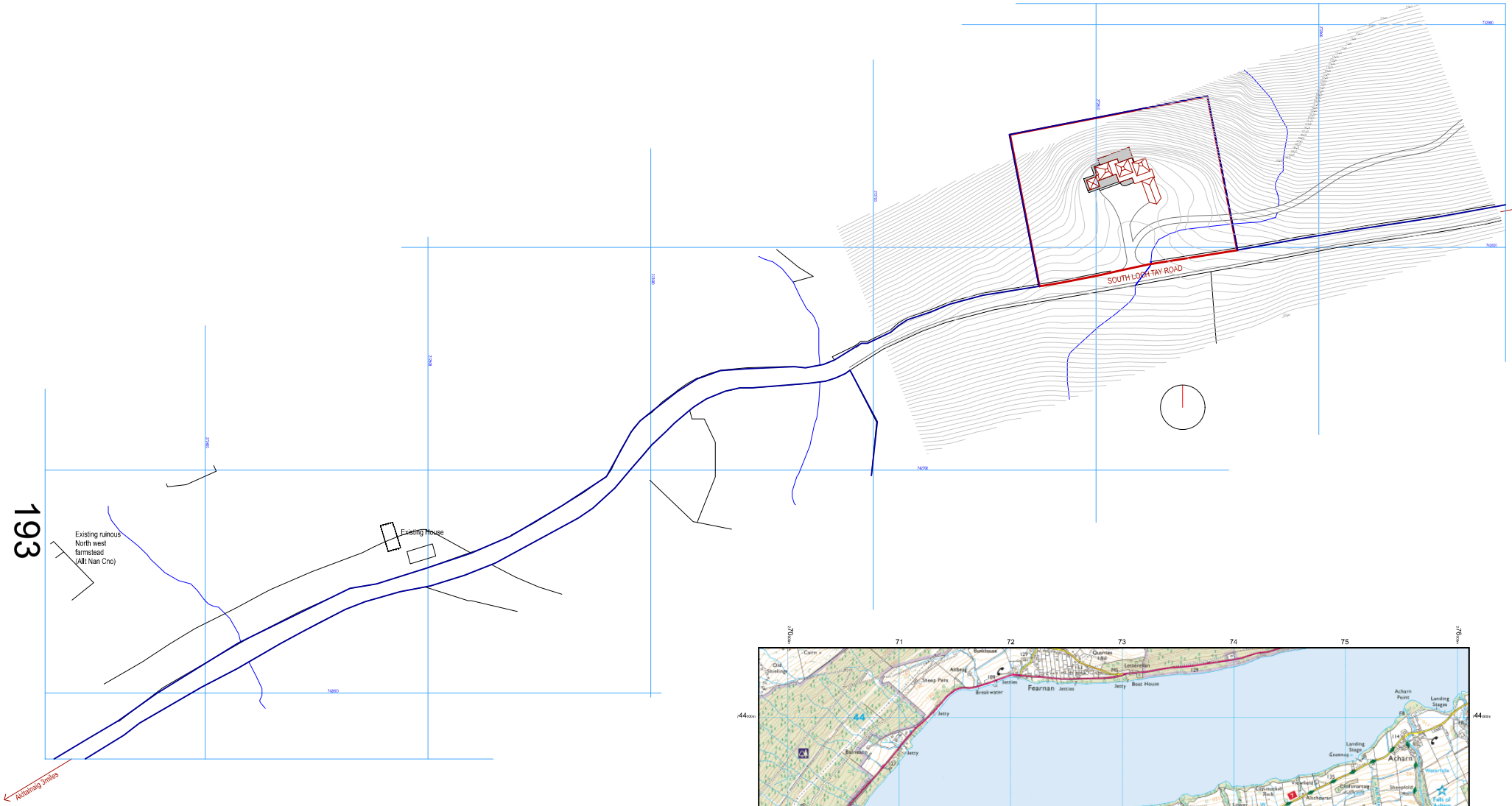

casa
colin . andrew . smith . architect
treetops . dull
aberfeldy . perthshire . PH15 2JQ
01887 820815
colin@casarchitect.co.uk

0 5 10 20 30
Scale 1:1250 in metres

N

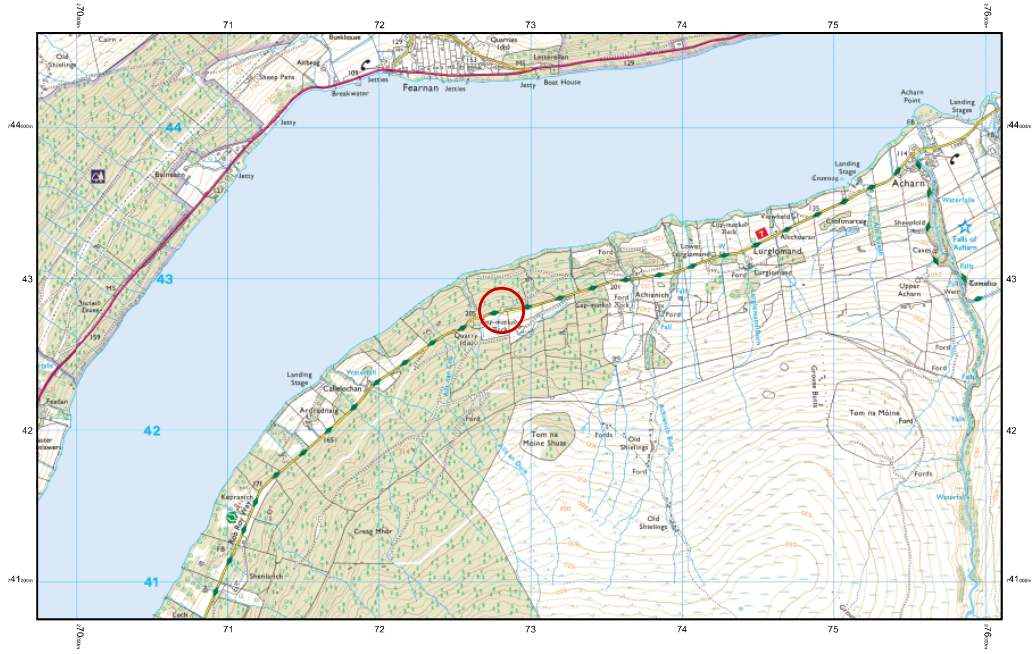
Fearnan
Acharn
Lurgiomand
Tom na Moine
Keprannich
Callieochan
Ardtaodrach
Creag Mhor
Shenlochan
Balmeanach
Achranich
Acharn Point
Landing Stage
Waterfalls
Falls of Acharn
Caravans
Upper Acharn
Old Shielings
Ford
Weir
Jetty
Boat House
Quarries
Sheep Pens
Aitkeig
Bunkhouse
Breakwater
Jetties
Lochan
Cairn
Pier
Fish Farm
Sluice
Cleuchbuan Hill
Vanfield
Achderran
Clachmarnag
Sheefold
Caves
Lower Acharn
Lower Lurgiomand
Sap-rannach Burn
Allt Na Dubh
Allt Na Fearna
Allt Na Cnoc
Allt Na Sgeir
Allt Na Sgeir Mhor
Allt Na Sgeir Bheag
Allt Na Cuaiche
Allt Na Cuaiche Bheag
Allt Na Cuaiche Mhor
Allt Na Cuaiche Be

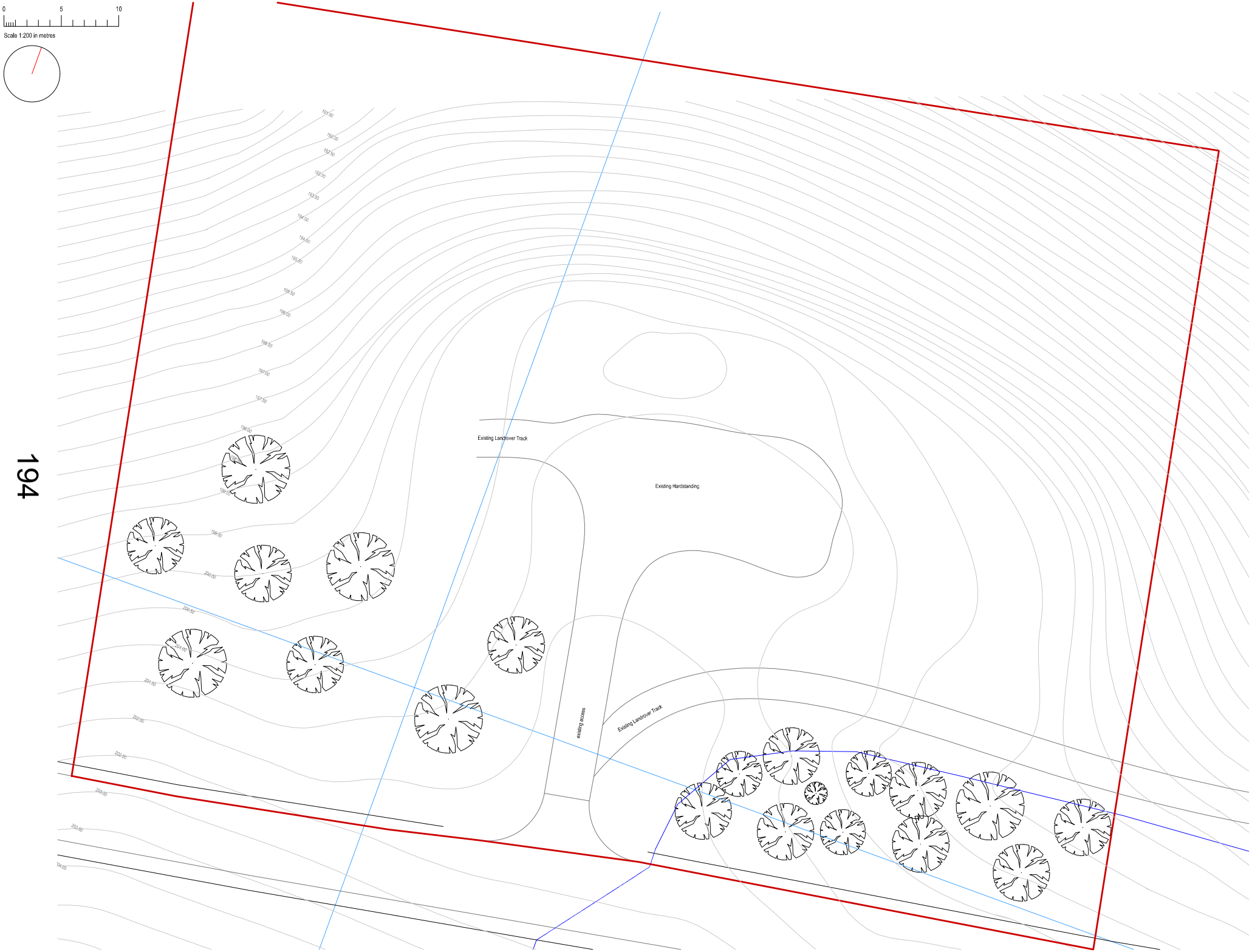

casa
colin . andrew . smith . architect
treetops . dull
aberfeldy . perthshire . PH15 2JQ
01887 820815
colin@casarchitect.co.uk

Amendments:

Replacement House at Kepranich
South Loch Tay
PH15 2HU

for:	Antoni S Fiotais
status:	Survey
title:	Existing Site Plan
drawing no:	309-01S
scale:	1:200 @ A2
Date	November2020

Copyright by CASA - All rights reserved

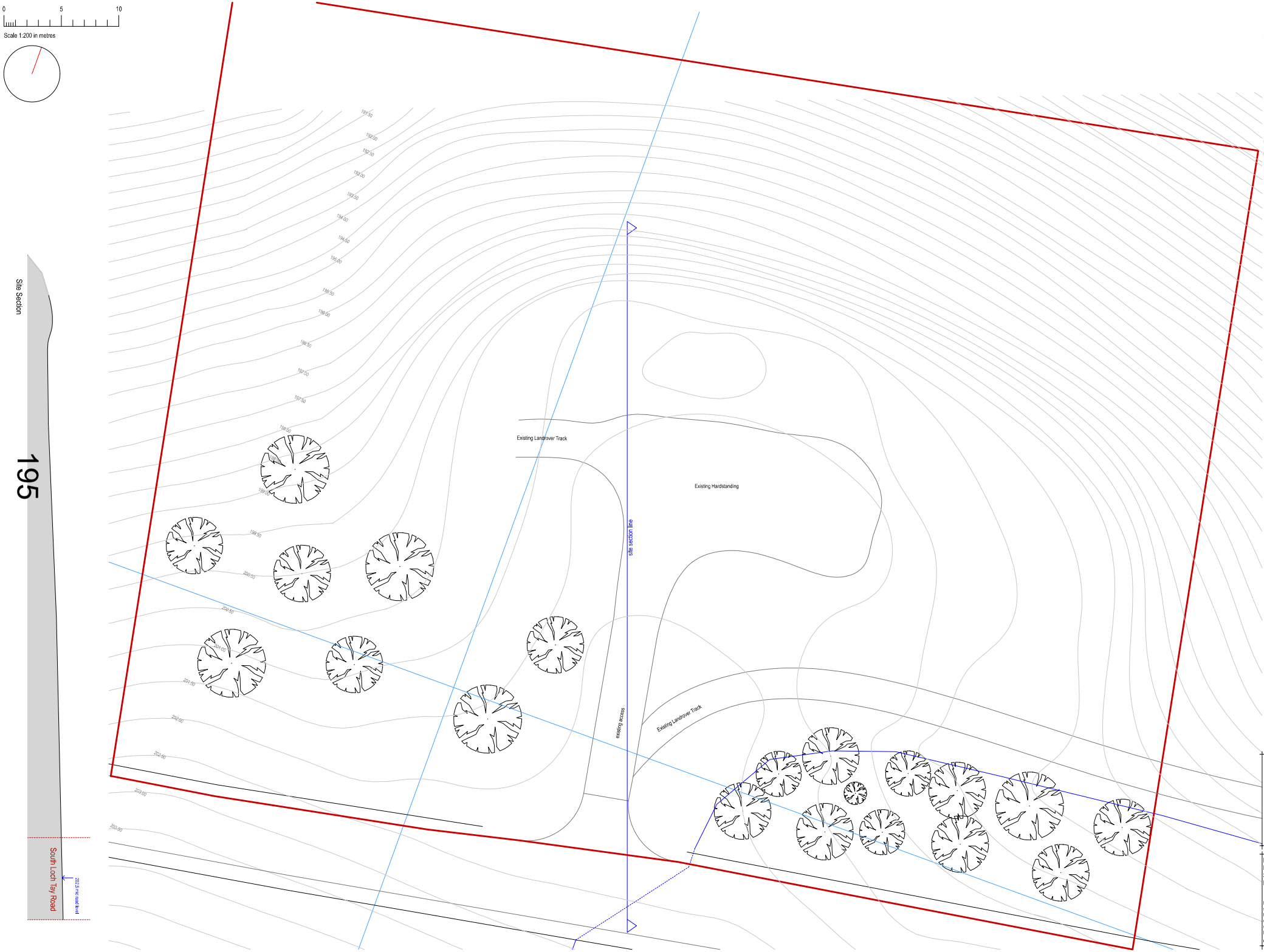

casa
colin . andrew . smith . architect
treetops . dull
aberfeldy . perthshire . PH15 2JQ
01887 820815
colin@casarchitect.co.uk

Amendments:
A-Site Section Added

Replacement House at Kepranich
South Loch Tay
PH15 2HU

for:	Antoni S Fiktals
status:	Survey
title:	Existing Site Plan
drawing no:	309-01S
scale:	1:200 @ A2
Date	November2020

Copyright by CASA - All rights reserved

casa
colin . andrew . smith . architect
treetops . dull
aberfeldy . perthshire . PH15 2JQ
01887 820815
colin@casaarchitect.co.uk

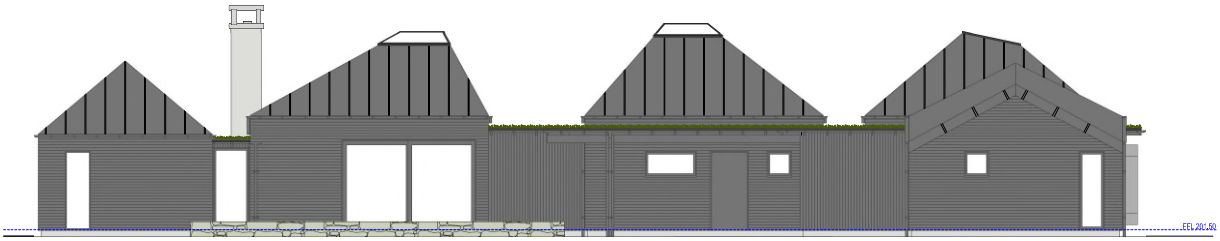

SOUTH EAST ELEVATION

NORTH EAST ELEVATION

NORTH WEST ELEVATION

SOUTH WEST ELEVATION

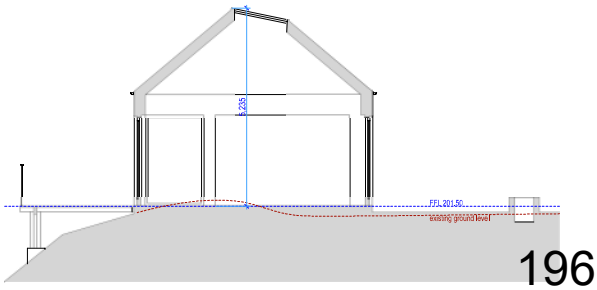

SECTION AA

0 5
Scale 1:100 in metres

Amendments:

Replacement House at Kepranich
South Loch Tay
PH15 2HU

for:	Antoni S Flotats
status:	Planning
title:	Elevations
drawing no:	309-02P
scale:	1:100 @ A2
Date	January 2021

Copyright by CASA - All rights reserved

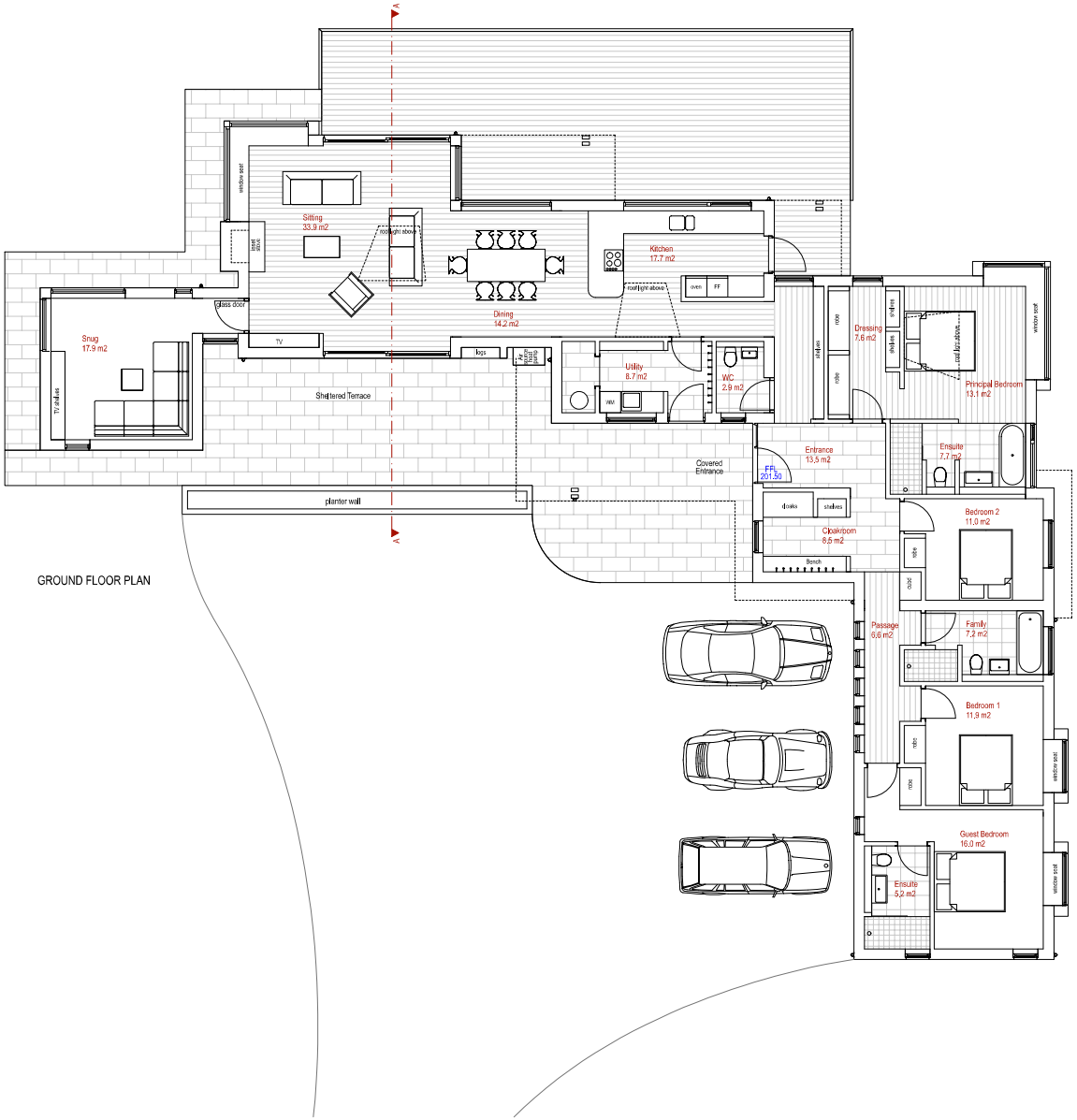

GROUND FLOOR PLAN

0 5
Scale 1:100 in metres

casa
colin . andrew . smith . architect
treetops . dull
aberfeldy . perthshire . PH15 2JQ
01887 820815
colin@casarchitect.co.uk

Amendments:

Replacement House at
Kepranich
South Loch Tay
PH15 2HU

for:	Antoni S Flotats
status:	Planning
title:	Ground Floor Plan
drawing no:	309-02P
scale:	1:100 @ A2
Date	January 2021

Copyright by CASA - All rights reserved

Kepranich, Loch Tay
Antoni S Flotats
Mark Myles
February 2021

BIDWELLS

PROPOSED REPLACEMENT HOUSE AT KEPRANICH, LOCH TAY
PLANNING POLICY STATEMENT

Table of Contents

1.0	Introduction	1
2.0	Site Description	1
3.0	Planning History	2
4.0	Planning Policy	3
5.0	Development Plan	4
6.0	Housing in the Countryside Policy and Principle of Development	5
7.0	Impact on Character and Amenity	7
8.0	Other Policy Matters	8
9.0	Conclusions	8

1.0 Introduction

1.1 This supporting statement should be read in conjunction with the detailed planning application that has been submitted to Perth & Kinross Council by Colin Smith Architect (CASA) on behalf of Mr Antoni S Flotats.

1.2 The land was purchased by the client in 2008 and previously consisted of commercial forestry which has since been felled and regenerated with mainly new broadleaf planting. The application seeks permission to erect a replacement house on the land known as Keprancih, Loch Tay.

1.3 This planning application has been submitted as a 'local application' under the Town & Country Planning (Development Management Procedures) (Scotland) Regulations 2013.

2.0 Site Description

2.1 The land is located on the southern shore of Loch Tay and is bound to the south by the minor public road (South Tay Road). It is a large land ownership which has no existing dwellinghouse.

2.2 The land rises steeply from the Loch side up towards the public road. The previous commercial woodland on the site has been felled and under the restocking obligation new replanting has been carried out over the last 10 years.

2.3 A former farmstead (Allt Nan Cno) has been identified from historical maps on the upper slope towards the western end of the land holding along with another former farmstead to the north of the proposed site.

2.4 A former house is also located immediately adjacent to the public road at the point where the existing overhead power line cuts across the site and then crosses the public road. The size, footprint, scale and form of the former derelict and ruinous house are all still clearly recognisable as seen from the photographs below. It is this former house which forms the basis of this planning application to erect a replacement dwelling. It should also be noted that the historical map included within the design statement shows that more than one building had previously occupied this area.

3.0 Planning History

3.1 There are no records of any previous planning applications on the land over the past 30 years.

3.2 Elsewhere along the southern side of Loch Tay there has been evidence of recent planning applications including some new build properties and replacement dwellings all approved within the last 5-10 years including to the west at Callelochan and Rock House to the east at Achianich. Both of those replacement houses were successfully designed by CASA on similar sites that have ensured a sensitive fit into the landscape.

4.0 Planning Policy

National Policy and Guidance

4.1 The Scottish Government expresses its planning policies through The National Planning Frameworks, the Scottish Planning Policy (SPP), Planning Advice Notes (PAN), Creating Places, Designing Streets, National Roads Development Guide and a series of Circulars.

National Planning Framework

4.2 NPF3 is a long-term strategy for Scotland and is a spatial expression of the Government's Economic Strategy and plans for development and investment in infrastructure. Under the Planning etc. (Scotland) Act 2006 this is now a statutory document and material consideration in any planning application. The document provides a national context for development plans and planning decisions as well as informing the on-going programmes of the Scottish Government, public agencies and local authorities. A replacement NPF4 is expected to be published in draft in Autumn 2021.

Scottish Planning Policy 2020

4.3 Scottish Planning Policy (SPP) was originally published in June 2014 and updated in December 2020 and sets out national planning policies which reflect Scottish Ministers' priorities for operation of the planning system and for the development and use of land. The SPP promotes consistency in the application of policy across Scotland whilst allowing sufficient flexibility to reflect local circumstances.

4.4 The following sections of the SPP are of importance in the assessment of this proposal:

- Sustainability: paragraphs 24 – 35
- Placemaking: paragraphs 36 – 57
- Promoting Rural Development: paragraphs 74-83

4.5 SPP is an important material consideration as its revision date (December 2020) postdates adoption of the Local Development plan. Paragraph 75 of SPP confirms that the planning system should encourage rural development that supports prosperous and sustainable communities and businesses whilst protecting and enhancing environmental quality.

4.6 Under the subject heading of Promoting Rural Development, Scottish Planning Policy paragraphs 81 advocates that '*plans and decision making should generally set out the circumstances in which new housing outwith settlements may be appropriate, avoiding the use of occupancy conditions.*'

4.7 Paragraph 83 also highlights that plans and decision making should include provision for small scale housing and other development which supports sustainable economic growth in a range of locations, taking account of environmental protection policies and addressing issues of location, access, siting, design and environmental impact. Where appropriate allowance should also be made for construction of single houses outwith settlements provided they are well sited and

designed to fit with local landscape character and there should be no need to impose occupancy restrictions on housing.

Scottish Government Advice – Creating Places and Planning Advice Note 72

4.8 The Scottish Government advice contained with Creating Places was published in 2013 and is the Scottish Government's policy statement on architecture and place. It sets out the comprehensive value good design can deliver. It notes that successful places can unlock opportunities, build vibrant communities and contribute to a flourishing economy and set out actions that can achieve positive changes in our places.

4.9 PAN 72 – Housing in the Countryside was published in February 2005. It predates the publication of SPP but is an important material consideration as it highlights the opportunities that exist from the changing circumstances created by the rise in the number of people wishing to live in the countryside.

4.10 The document refers to important criteria such as design, landscape setting, layout and access. The PAN states that the *'overall aim should be to ensure that new housing is carefully located, worthy of its setting, and is the result of an imaginative, responsive and sensitive design process.'* The PAN concludes by stating that *'there will continue to be a need for new houses in the countryside and this demand will have to be accommodated. This change can be positive, if it is well planned. The location and appearance of each new house must be determined with care and thought, as short term thinking can have a long term impact on the landscape.'*

4.11 The council's supplementary guidance on Housing in the Countryside, acknowledges that the council is keen to assist opportunities for housing in rural areas in accordance with PAN 72.

5.0 Development Plan

5.1 Section 25 of the Town & Country Planning (Scotland) Act 1997 (as amended) requires proposals to be determined in accordance with the provisions of the development plan unless material considerations indicate otherwise.

5.2 In this case the relevant development plan consists of the Tayplan Strategic Development Plan 2017 (for which there are no directly relevant policies) and the Perth & Kinross Local Development Plan 2 (LDP2) (adopted November 2019).

5.3 In terms of other material considerations, the council's Supplementary Guidance on Housing in the Countryside Policy – 2020 is the most significant in terms of the detailed criteria it contains for assessing this type of proposal. In addition, Scottish Planning Policy (2020) and Planning Advice Note 72 – Housing in the Countryside are also considered to be of relevance to this application and these are set out in more detail in chapters 6 and 4 respectively.

5.4 The principle of erecting a house on this site is required to be considered under the terms of Policy 19 in LDP2. The policy allows for the erection of individual houses in the countryside which fall into certain categories i.e. building groups, infill sites, new houses in the countryside,

renovation or replacement of houses, conversion or replacement of non-domestic buildings, and rural brownfield land.

5.5 This proposal can be considered under the terms of Section 4 on 'replacement of houses' of Policy 19 within LDP2 and the Supplementary Guidance.

5.6 Policy 1 Placemaking of the LDP2 also requires all developments to contribute positively to the quality of the surrounding environment and that the design and siting of development should respect the character and amenity of the place.

5.7 The Development Plan policy position covering this site is therefore up to date and relevant. Having regard to the provisions of the development plan the main points raised by the proposal are considered to be;

- Whether the proposal can be considered compatible with the council's housing in the countryside policy in compliance with Policy 19 of the LDP2 and the council's associated Supplementary Guidance on Housing in the Countryside which was adopted in March 2020;
- Whether the proposed design and layout respects the landscape, character, and amenity of the area in accordance with Policy 1 - Placemaking of the LDP2 and the council's associated Supplementary Guidance on Placemaking adopted in March 2020; and
- Whether suitable servicing and safe access or appropriate mitigation can be provided to the site in accordance with Policies 47 and 60B of LDP2.

6.0 Housing in the Countryside Policy and Principle of Development

6.1 Policy 19 in LDP2 states that the Council 'will support proposals for the erection, or creation through conversion, of single houses and small groups of houses in the countryside which fall into at least one of the following categories:

(1) building groups;

(2) infill sites;

(3) new houses in the open countryside on defined categories of sites as set out in Section 3 of the Supplementary Guidance;

(4) renovation or replacement of houses;

(5) conversion or replacement of redundant non-domestic buildings;

(6) development on rural brownfield land.

Development proposals should not result in adverse effects, either individually or in combination, on the integrity of the Firth of Tay and Eden Estuary, Loch Leven, South Tayside Goose Roosts and Forest of Clunie SPAs and Dunkeld-Blairgowrie Loch and the River Tay SACs. Applications shall be supported by sufficient information to allow the Council to conclude that there would be no such adverse effects.'

6.2 Harnessing the potential of traditional rural buildings which have become redundant is particularly important to achieving the aims of Policy 19 as well as meeting the aims of Scottish Planning Policy on the promotion of housing in all rural areas. Traditional buildings are defined as buildings usually constructed before 1919 of materials which would have been available in the local area at that time, largely stone (with or without harling) and slate. These buildings not only make a significant contribution to the character and quality of the rural landscape but are an important resource which should be reused wherever possible in the interest of sustainability and to help meet rural housing needs.

6.3 Under the Replacement Houses (category 4) of the policy, the council's supplementary guidance confirms that 'the replacement of a ruinous house will be permitted where all of the following criteria are met:

- there is substantial visible evidence of the structure of the original building above ground level to enable its size and form to be identified, and
- it is an established site with a good setting and a good 'fit' in the landscape, and
- the existing/established site boundaries are capable of providing a suitable enclosure for the new house.

6.4 As can be seen from the photographs, the former house that is located immediately adjacent to the roadside is clearly ruinous but at the same time it is also clearly recognisable as a former house as the four walls are still well defined, a gable wall and chimney are still visible, including render on part of the outside gable wall and the former window and door openings can still be defined in the derelict structure.

6.5 In all cases where the demolition of an existing house is permitted, the following criteria are also required to be met;

- The replacement house must be of a high-quality design appropriate to its setting and surrounding area.
- The scale of the new house will normally be similar to that of the existing building.
- The siting of the new house should be similar to that of the existing building in terms of orientation and distance from the road, unless individual site conditions suggest that another position would create a better landscape fit.
- If an alternative position is sought, or the proposed house is to be of a significantly different scale, this should be justified in a supporting planning and design statement.

6.6 The setting of the former derelict house is extremely constrained by its location in that it sits hard to the edge of the public road and is also set down at a lower level from the road. Whilst the site has a reasonable landscape framework there are also issues with regards to the close relationship with trees and the overhead power lines that cross the site. Obtaining a suitable vehicular access to the site and creating any private amenity space would also be very challenging.

6.7 The principle of allowing a replacement house at Kepranich is therefore considered to meet the first criteria in that there is substantial visible evidence of the structure of the original building above ground level to enable it size and form to be identified. However due to the obvious constraints associated with the existing site, and the inability to provide a satisfactory setting and level of residential amenity, it is therefore considered that a more sensitive and suitable solution

would be to remove the ruin and accommodate a replacement house on an area at Kepranich that continues to have a good fit in the wider landscape and where existing boundaries and trees are capable of providing a suitable sense of enclosure. A more suitable site has therefore been identified a short distance to the east on which to erect the replacement house.

6.8 When assessing the additional criteria for any replacement house, the reasons for seeking an alternative site that is set back from the public road are self-evident. The pattern of development and character of the buildings that are located along the southern side of Loch Tay are generally all set back a short distance from the public road to provide a reasonable means of safe access, an appropriate landscape setting and adequate private amenity space. This is what is also proposed in this current planning application.

6.9 The proposed replacement house is considered to be of a high-quality design and also proposes external finishes that are appropriate to its setting and location. The Supplementary Guidance does allow scope (depending on high quality design and appropriate choice of location and siting) to propose a replacement house that is larger but at the same time also respects the character of the former house. It is also evident that a number of replacement house proposals have been allowed along this southern side of Loch Tay by Perth & Kinross Council in recent years.

6.10 Given that most of the ground at Kepranich is steeply sloping, the existing level access that is located to the east of the ruinous cottage together with the associated flatter hardstanding area is really the only suitable alternative location on which to look to site a replacement house within the Kepranich landholding. This alternative site does however also benefit from being set within an area that is surrounded by woodland planting by virtue of the restocking obligation programme already undertaken by the applicant, and this woodland continues to mature year on year.

7.0 Impact on Character and Amenity

7.1 In terms of impact on the landscape and the general character and visual amenity of the area, Policy 1A – Placemaking states that '*Development must contribute positively to the quality of the surrounding built and natural environment. All development should be planned and designed with reference to climate change, mitigation and adaptation. The design, density and siting of development should respect the character and amenity of the place, and should create and improve links within and, where practical, beyond the site. Proposals should also incorporate new landscape and planting works appropriate to the local context and the scale and nature of the development.'*

7.2 Policy 1B also states that all proposals should meet all the following placemaking criteria:

(a) *Create a sense of identity by developing a coherent structure of streets, spaces, and buildings, safely accessible from its surroundings.*

(b) *Consider and respect site topography and any surrounding important landmarks, views or skylines, as well as the wider landscape character of the area.*

(c) *The design and density should complement its surroundings in terms of appearance, height, scale, massing, materials, finishes and colours.*

(d) *Respect an existing building line where appropriate or establish one where none exists. Access, uses, and orientation of principal elevations should reinforce the street or open space.*

(e) *All buildings, streets, and spaces (including green spaces) should create safe, accessible, inclusive places for people, which are easily navigable, particularly on foot, bicycle and public transport.*

(f) *Buildings and spaces should be designed with future adaptability, climate change and resource efficiency in mind wherever possible.*

(g) *Existing buildings, structures and natural features that contribute to the local townscape should be retained and sensitively integrated into proposals.*

7.3 As noted above the option to redevelop the former ruinous house reflects the spirit of Policy 1 and is consistent with category 4 of Policy 19.

7.4 The detailed design, siting of development, protection of the character and amenity of the wider surroundings and of the woodland areas across the site all contribute to help define a proper setting and curtilage for the proposed replacement property, and as such the proposal contributes positively to the quality of the surrounding built and natural environment and is able to achieve compliance with all of the relevant criteria of Policy 1.

8.0 Other Policy Matters

8.1 Under Policy 47: River Tay Catchment Area, the Council also seek to protect and enhance the nature conservation interests within the River Tay Catchment Area. The proposed private drainage measures will ensure that there are no adverse effects on the River Tay Special Area of Conservation.

8.2 In terms of access, the existing public road is narrow in places but the opportunity to utilise the existing access and create a safe access is shown within the application submission. Accordingly, there would be no conflict with Policy 60B of the LDP2 which requires '*All development proposals (including small-scale proposals) to:*

(a) be designed for the safety and convenience of all potential users; and

(b) incorporate appropriate mitigation on-site and/or off-site.

9.0 Conclusions

9.1 In this case the principle of replacing the ruinous house would be considered to meet with category 4 of Policy 19 (Housing in the Countryside Policy).

9.2 A replacement house at Kepranich would meet the first criteria of the council's Supplementary Guidance in that there is substantial visible evidence of the structure of the original building above ground level to enable it size and form to be clearly identified.

9.3 The Supplementary Guidance does allow scope (depending on high quality design and appropriate choice of location and siting) to propose a replacement house that is larger than the existing but at the same time can also respect the traditional character of the former house. It is also evident that the proposed replacement house is consistent with the siting, scale and form of

the houses that have been permitted along this southern side of Loch Tay by Perth & Kinross Council in the recent past.

9.4 The setting of the former derelict house is clearly constrained by trees, overhead power lines and its proximity and poor low-lying level in relation to the adjacent public road which would prevent an adequate standard of amenity from being created. As noted in the design statement, the replacement house is considered to be a high-quality innovative contemporary design appropriate to its setting and location (in accordance with Creating Places and PAN 72) and there are justifiable reasons to relocate to the proposed alternative site as set out in the application submission, the design statement and this planning statement.

9.5 As the proposal would constitute a replacement house, there would be no developer contributions required in this case.

9.6 For the reasons set out above and subject to the detailed planning considerations e.g. siting, design, layout, access, water supply, drainage and landscaping, this proposal to replace the existing ruinous house at Kepranich is considered to comply with Policies 1, 19, 47, and 60B within the Local Development Plan 2.

9.7 Accordingly, the council are requested to approve the application subject to any conditions that are considered necessary and appropriate.

BIDWELLS

Bidwells is a trading name of Bidwells LLP,
a limited liability partnership, registered in
England and Wales with number OC344553.
Registered office: Bidwell House,
Trumpington Road, Cambridge CB2 9LD

NIBE

NIBE Air source heat pumps

CAPTURE FREE ENERGY FROM THE OUTSIDE AIR

FREE ENERGY, ANYONE?

Look out of your window and what do you see?
The street, the house opposite, the trees and fields?
What we at NIBE see is a free source of energy – the air.

Believe it or not, you can actually use the outside air, one of nature's totally free gifts, to heat, and indeed cool your home. Even at sub zero temperatures, ambient air contains heat and when you concentrate that heat using a NIBE air source heat pump, you can get enough out of it to heat up both your home's water-based radiators (or underfloor heating) and domestic hot water.

It's amazing, but true. We know, because we've already been using heat pump technology in Sweden for over 30 years.

You save money

An air source heat pump makes heating your home and hot water much cheaper. You can reduce your heating costs by up to 65%, although the exact figure depends on several factors such as where you live, the size of your house and the fuel you are replacing.

The initial investment is relatively low since an air source heat pump, unlike a ground source heat pump, does not require any drilling.

And the efficiency of NIBE's heat pumps positively impacts the speed with which you recover your investment. With energy prices continually rising, you're unlikely to regret your decision. In fact, you'll start enjoying savings from the first month.

You reduce CO_2 emissions

Another very good reason for choosing a NIBE air source heat pump is that it has a very low environmental impact. In fact, installing a NIBE air source heat pump can cut your home's CO_2 emissions in half. This is mainly because there is no combustion process involved; the heat pump merely upgrades naturally occurring energy from the air outside to heat your home and hot water.

This leads to much lower CO_2 emissions than any traditional fossil-fuel based heating system, and explains why NIBE air source heat pumps are classified as a renewable energy source.

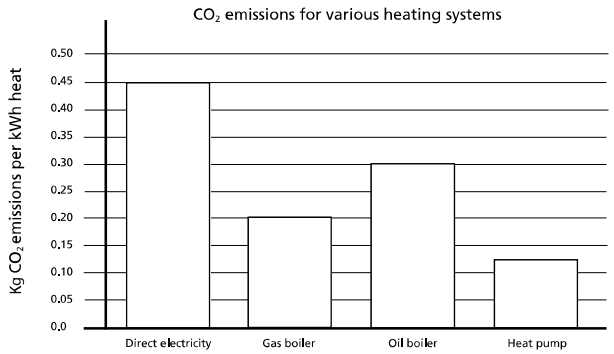

Consider this

If all the approximately 1 million new houses built in Europe installed heat pumps, we would be saving over 3 600 000 tonnes of CO_2 emissions per year. That's the equivalent of taking about a million cars off the road!

Wherever you live, you can install an air source heat pump and enjoy efficient, safe, problem-free heating and domestic hot water at a fraction of the alternative cost and a fraction of the environmental impact.

How do NIBE air source heat pumps compare with traditional boilers?

To put it simply, they're three times more efficient! With conventional oil and gas boilers, 1 kWh of input energy provides less than 1 kWh of output energy. Using a NIBE air source heat pump every 1 kWh of input energy is converted into an average of 3 kWh of output energy. There is no escaping the obvious conclusion – a heat pump is the absolute best way to get low cost heating and hot water.

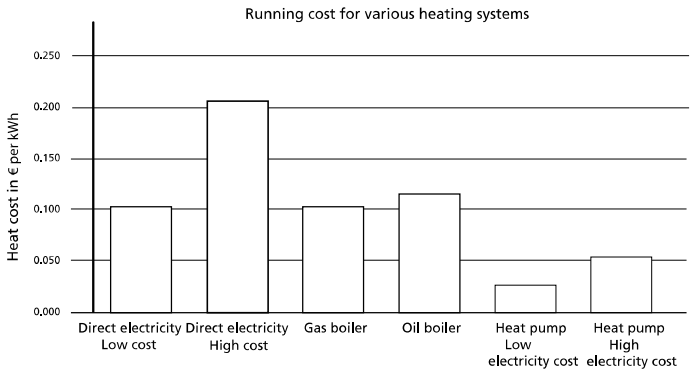

MORE GOOD REASONS TO INSTALL A NIBE AIR SOURCE HEAT PUMP

– NIBE air source heat pumps are easy to install, operate and maintain.

– They can be installed on almost any kind of terrain.

– They can be combined with a variety of different energy sources, depending on availability and price.

– Ideal for underfloor heating and water-filled radiators.

– No natural gas supply, flues, ventilation, or chimney are needed.

– NIBE air source heat pumps give you clean and discreet heating.

– They are built to last so you can relax and enjoy cost-effective, hassle free heating for years to come!

HOW DO YOU GET HEAT FROM COLD AIR?

Heat pump technology is actually based on a very simple, well-known principle. It works in a similar way to any domestic refrigerator, using a vapour compression cycle.

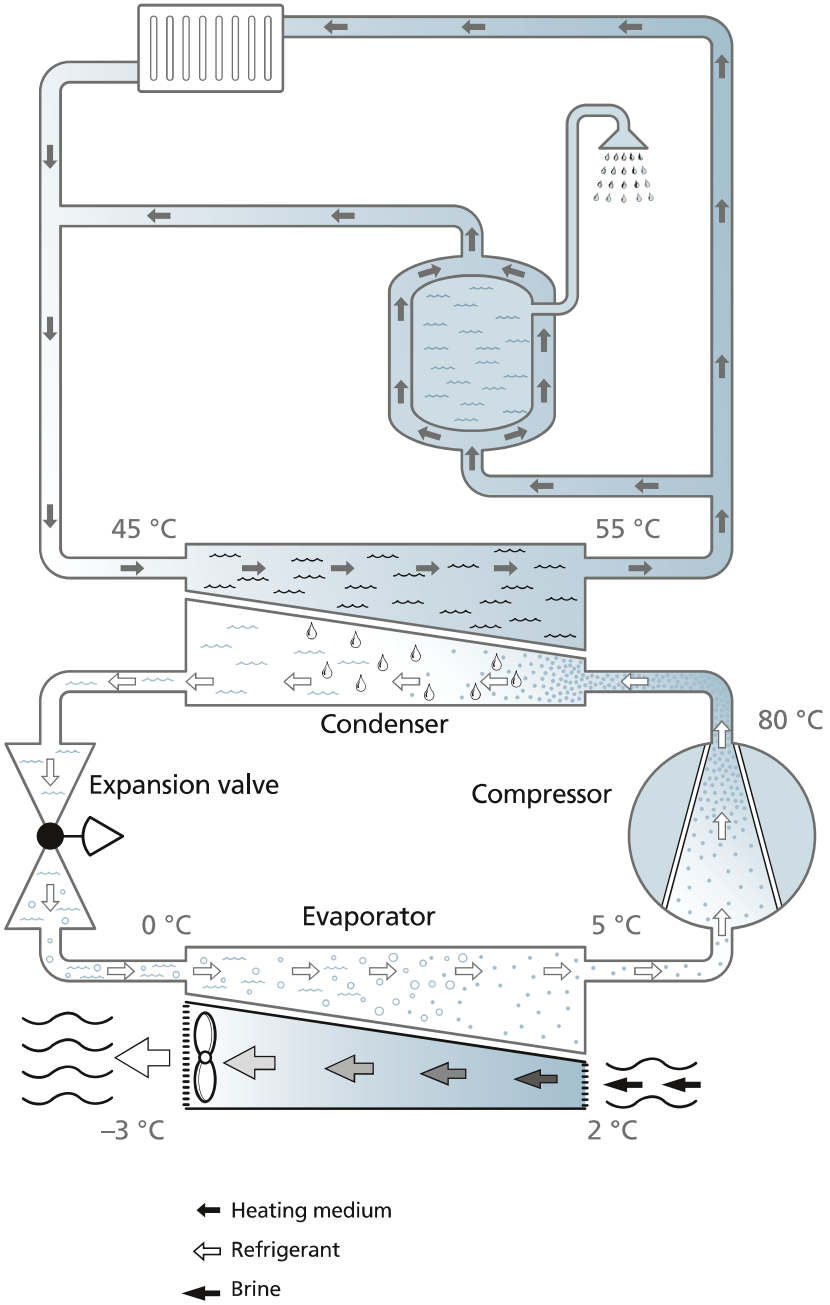

The main components in the heat pump are the compressor, the expansion valve and two heat exchangers (an evaporator and a condenser).

A fan draws the outdoor air into the heat pump where it meets the evaporator. When the outdoor air hits the evaporator the refrigerant will turn into gas.

Then, using a compressor, the gas reaches a high enough temperature to be transferred in the condenser to the house's heating system. At the same time the refrigerant reverts to liquid form, ready to turn into gas once more and to collect new heat.

The electrical energy to drive this process compared to the heating energy that is given to the house has a seasonal factor of about 3. This means that if you use 15,000 kWh for heating and domestic hot water after installation you only need about 5000 kWh. The exact saving depends on the climate and whether you have a low, medium or high temperature heating system. Let us make a calculation based on your house and needs.

WHAT IS THE RENEWABLE HEAT INCENTIVE?

Get paid to generate heat

The Renewable Heat Incentive (RHI) is a government-backed financial incentive scheme designed to encourage UK homes to swap to renewable heating systems. Under the RHI, heat pump, biomass or solar thermal system owners are rewarded for the renewable heat they generate over a seven-year period.

How much could you earn?

How much you could earn depends on the technology you choose and the tariffs set out by the government (measured in pence per kilowatt-hour for the renewable heat produced).

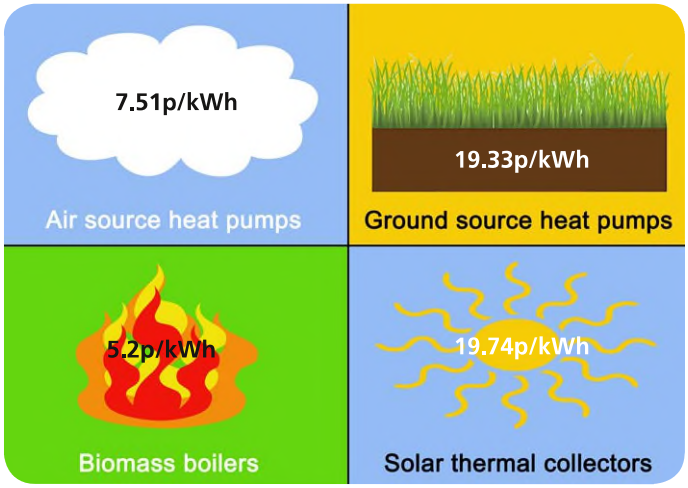

Payment calculations are based on an estimate of how much heat your home will require from a renewable heating system and how it will perform once installed. As well as the technology itself, performance will also depend on other factors, such as insulation levels and the heat emitters your system uses (for example, low-temperature underfloor heating is likely to be more efficient than traditional radiators). If you received a grant towards the cost of your system under the Renewable Heat Premium Payment (RHPP), this will be deducted from your RHI payments.

Before applying for RHI payments you will need an up-to-date Energy Performance Certificate (EPC), which shows how efficient your property is. If your EPC recommends loft and cavity wall insulation it must be installed, and the EPC replaced prior to applying. There are some circumstances under which you may be exempt from this requirement for which you must submit evidence.

Example

A NIBE air source heat pump fitted in a typical three-bedroom home could generate RHI payments of more than £820 per year (which works out as around £5,740 over the seven-year scheme)*

Who is eligible?

Anyone who retrofits an air source or ground source heat pump, biomass boiler or solar thermal system in a single domestic property is eligible for RHI payments (whether they are an owner-occupier or private/social landlord). Self-build properties are the only new-build installations that are eligible.

To qualify for RHI payments, your system needs to have been fitted by an installer who has the right training and accreditation under the Microgeneration Certification Scheme (MCS). Opting for a NIBE VIP installer gives you complete peace of mind, as not only are all NIBE VIPs fully MCS-accredited, they can also offer an extended warranty on certain products – so it pays to make sure you deal with the experts.

References

**Actual figure £821.96 a year (£5,753.72 in total over the seven-year scheme). Based on a total annual energy demand of 15,000 kWh, system coefficient of performance (SCOP) of 3.7 and air source heat pump tariff payments of 7.51 p/kWh*

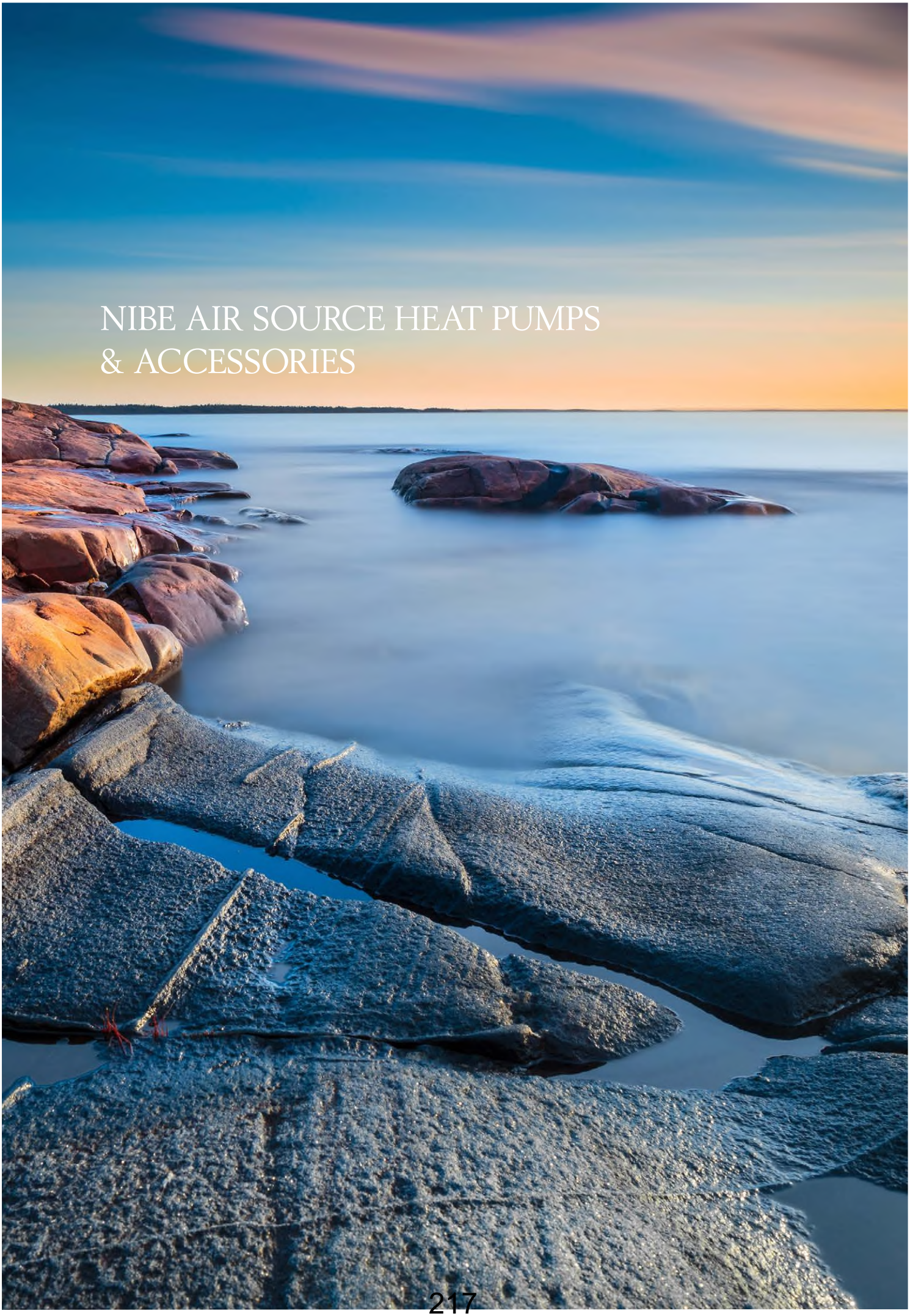

NIBE AIR SOURCE HEAT PUMPS & ACCESSORIES

NIBE AIR SOURCE HEAT PUMP MONOBLOC RANGE

NIBE™ F2040
NIBE™ F2300

The new NIBE monobloc air source range consists of NIBE F2040 for residential use and NIBE F2300 for large properties and commercial use. Much effort has been made to create attractive system combinations.

The NIBE products have been developed with special attention to make the installation as smooth as possible. For example together with the outdoor unit we always include anti-vibration water connections. A broad accessory programme is available and a large number of recommended possible combinations.

APPROVED PRODUCT

Certificate number: MCS HP0003
Heat pumps

NIBE™ F2040

The NIBE monobloc air source range consists of the new NIBE F2040-8,12 and 16 for residential use.

The F2040 are new air source outdoor units that are particularly suitable for residential buildings. Great effort has been made to create attractive system combinations.

NIBE F2040

Max outgoing heating medium temperature	58 °C
Refrigerant quantity (R410A)	2.55/2.9/4.0 kg
Height (incl. feet)	900/995/1450 mm
Width	1025/1145/1145 mm
Depth	420/450/450 mm
Weight	90/105/135 kg

Models

Voltage 230 V~ 1-phase
NIBE F2040-8
NIBE F2040-12
NIBE F2040-16

NIBE™ F2300

The NIBE monobloc air source programme consists of the NIBE F2300, for large properties and commercial use.

F2300-14 and -20 are two air source outdoor units that are particularly suitable for large residential or commercial buildings. Great efforts have been made to create attractive system combinations.

Special attention has been given to minimizing the noise level. F2300-20 kW is one of the quietest units available on the market.

NIBE F2300

Heating systems up to	65 °C
Heating working range, outdoor temperature	–25 °C – +40 °C
Height (incl. feet)	1385 mm
Width	1455 mm
Depth	620 mm
Weight	225/230 kg

Models

Voltage 400 V~ 3-phase

NIBE F2300-14

NIBE F2300-20

NIBE™ SMO 20/40

NIBE SMO 20/40 is an advanced control module that supports a broad range of different hydraulic schemes. NIBE SMO 20/40 enables you to combine a NIBE air source heat pump with other equipment and create your own customised heating system. Start with one NIBE air source heat pump; if you need more power, you can install as many as nine NIBE air source heat pumps together in the same system. The addition of NIBE SMO 20/40 intelligent control module allows your NIBE air source heat pump to work smoothly in a variety of ways. For example:

- Connected to another heating system such as gas, oil, electricity or district heating.
- Connected to a NIBE water heater of the size required to meet your domestic hot water needs.
- If you have a swimming pool, NIBE SMO 40 can connect your heat pump to your pool and heat that too.
- Systems controlled by NIBE SMO 40 can also incorporate solar panels, enabling you to use solar energy as a complementary heat source when available.
- Multicolour display with user instructions and multilingual support
- Controlled charge pump as accessory from NIBE.
- Heating, cooling, pool heating, step controlled extra heat source.
- Clear information about status, operating time and all temperatures in the system is shown on the large and easy-to-read display.
- NIBE SMO is compatible with NIBE Uplink

FLEXIBLE SYSTEM SOLUTIONS

NIBE SMO 20/40 system

Outdoor unit	Indoor unit
NIBE F2040-8	NIBE SMO 20/40
NIBE F2040-12	NIBE SMO 20/40
NIBE F2040-16	NIBE SMO 20/40
NIBE F2300-14	NIBE SMO 20/40
NIBE F2300-20	NIBE SMO 20/40

FREEDOM – ANYWHERE, ANY TIME

NIBE UPLINK™

Using the Internet and NIBE Uplink you can get a quick overview and the present status of your heat pump and the heating in your property. You get a good overall view where you can follow and control your heating and hot water production. If your system is affected by an operational disturbance you receive an alert via e-mail that allows you to react quickly.

NIBE Uplink also gives you the opportunity to control comfort in your property no matter where you are. **We call it NIBE freedom.**

- NIBE introducing a new, efficient tool that gives you quick and easy control over your property's heat pump – wherever you are.
- A web interface over the Internet offers you an instant view of e.g the temperature and current status of the heat pump in your property.
- Provides the benefit of external monitoring for several properties at the same time.
- Clear, easy way of monitoring and controlling heating and water temperatures for maximum comfort.
- In the unlikely event of a system malfunction you receive an alarm directly in your mail, allowing you to respond in the fastest possible time.
- Simple installation with a "click" of an ethernet cable.
- Provides logging of heat pump parametres presented in a user-friendly history chart.

New

- API functionality for external integration of e.g home management systems and BMS
- NIBE Uplink app for compatible smart phones

WHAT MAKES THE NIBE™ F2040 SUCH AN EFFICIENT AND VERSATILE HEAT PUMP?

1 Silent operation
Carefully-selected components ensure a low sound power level of F2040.

2 Compressor control
High efficiency at low ambient temperatures. The compressor is operated and controlled in such a way as to be efficient even at low ambient temperatures.

3 Hard-wearing materials
The NIBE F2040 heat pump is constructed using particularly hard-wearing materials to guarantee long service life even in harsh outdoor conditions.

4 Discreet design
The NIBE F2040 has a neutral appearance with compact dimensions which blend unobtrusively in with the surroundings outside your house.

5 Robust condensation water solution
The condensate water produced during the defrost operation is gathered in a built-in tray and can be transferred one to six metres to a collection point using the KVR 10 accessory.

6 Flexible system solutions
NIBE offers a choice of ready-made combinations with indoor modules that are designed to work optimally with the NIBE F2040.

7 Low start-up current
Prevents interference with other electronic devices. NIBE F2040 has an inverter-driven compressor for low start-up current. The slow start-up and gradual move up to required capacity prevents interference with other electronic devices in the building.

8 Fan (motor and blade)
Driven by an energy-saving motor, the fan's speed varies so only the required amount of air is utilised. The blades are specially designed to move as much air as possible at the lowest noise level.

NIBE™ F2040 TECHNICAL SPECIFICATION

Product specifications		F2040–8	F2040–12	F2040–16
COP according to EN14511 ΔT5K				
Delivered/supplied power/COP 7/35 °C**		3,85/0,84/4,58	5,12/1,08/4,74	7,22/1,55/4,65
Delivered/supplied power/COP 2/35 °C**		6,03/1,59/3,79	6,77/1,74/3,89	9,58/2,53/3,78
Delivered/supplied power/COP –7/35 °C**		5,91/2,08/2,84	7,95/2,69/2,95	10,79/3,76/2,86
Delivered/supplied power/COP 2/55 °C**		4,35/2,03/2,14	5,88/2,69/2,18	7,35/3,73/1,97
Delivered/supplied power/COP 7/45 °C**		3,58/1,03/3,47	4,99/1,36/3,66	6,64/1,85/3,58
Delivered/supplied power/COP 2/45 °C**		5,11/1,81/2,82	6,47/2,20/2,94	9,02/3,17/2,84
Delivered/supplied power/COP –7/45 °C**		5,61/2,27/2,47	7,78/3,14/2,47	10,98/4,52/2,42
Delivered/supplied power/COP –15/45 °C**		4,99/2,56/1,94	7,83/4,03/1,94	9,25/4,89/1,89
Delivered/supplied power/COP 7/55 °C**		3,46/1,11/3,11	4,71/1,52/3,09	5,97/2,05/2,91
Delivered/supplied power/COP –7/55 °C**		4,58/2,36/1,94	6,02/2,98/2,02	8,06/4,05/1,99
Heating capacity				
Outdoor temp/ flow temp –3 °C/35 °C	kW	8,7	11,7	15,8
Outdoor temp/ flow temp –3 °C/45 °C	kW	8,8	11,9	14,4
Outdoor temp/ flow temp –3 °C/50 °C	kW	8	11,2	13,3
Outdoor temp/ flow temp –3 °C/55 °C	kW	7,3	10,5	12,2
Rated voltage		230V 50Hz, 230V 2AC 50Hz		
Max operating current heat pump	(A)	16	23	25
Max operating current compressor	(A)	15	22	24
Starting current	(A)	5	5	5
Nominal input fan	(W)	86	86	2x 86
Airflow	(m3/h)	3000	4380	6000
Height with stand	(mm)	895	995	1145
Width	(mm)	1025	1145	1145
Depth	(mm)	420	452	452

***outside temperature/flow temperature*

Products specifications		Hot Water Cylinder					
		NIBE VVM 320	Megacoil 160 L	Megacoil 200 L	Megacoil 300 L	Solar 200 L	Solar 300 L
Volume (net)	l	180	148,5	179	271	174,5	267,4
Output immersion heater	kW	7	3	3	3	3	3
Height	mm	1800	971	1129	1608	1135	1609
Width	mm	600	585	585	585	585	585
Depth	mm	615	–	–	–	–	–
Net weight	kg	146	42	45	59	49	61

Hot Water Demand	NIBE VVM 320	Megacoil 160 L	Megacoil 200 L	Megacoil 300 L	Solar 200 L	Solar 300 L
1 Bathroom	✓	✓	✓	✓	✓	✓
1 Bathroom + En-Suite	✓		✓	✓	✓	✓
2 Bathrooms	✓		✓	✓		✓
3 Bathrooms				✓		

Guidance only – number of bedrooms, high flow showers, large baths etc. should be taken into consideration

	F2040-8	F2040-12	F2040-16
Sound power level* According to EN12102 at 7/45 (nominal) (Lw (A))	54	57	61
Sound pressure level at 2m free standing* (dB(A))	40	43	47
Sound pressure level at 6m free standing* (dB(A))	30,5	33,5	37,5
Sound pressure level at 10m free standing* (dB(A))	26	29	33

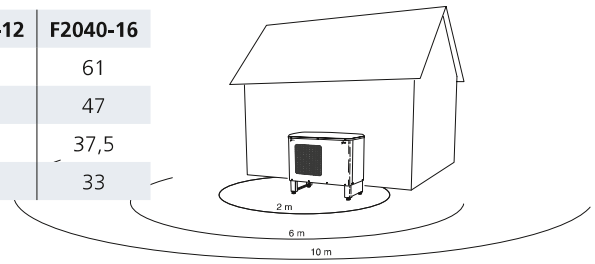

**free space*

SYSTEMS USING THE NIBE™ F2040 AIR SOURCE HEAT PUMP

NIBE offers a broad selection of accessories and complete indoor modules. These have been developed along with our air source heat pumps to optimise their efficiency and achieve maximum savings. You will need to know the approximate annual energy requirements of your home before deciding which system to choose. Ask your local NIBE VIP installer to check out your current heating system and calculate your energy requirements.

FLEXIBLE SYSTEM SOLUTIONS

NIBE VVM 320 system

Outdoor unit	Indoor unit
NIBE F2040-8	NIBE VVM 320
NIBE F2040-12	NIBE VVM 320

All-in-one indoor unit cabinet solution NIBE VVM 320

NIBE VVM 320 indoor unit takes care of your hot water demand and ensures that the correct heating power is sent to your heating system in the most efficient way. Heat production is reliable and economical with integrated hot water heater, circulations pumps, control system and immersion heater.

NIBE VVM 320 is equipped with the new generation controller for comfort, good economy and safe operation. Clear information about status, operating time and all temperatures in the system is shown on the large and easy to read display.

The indoor unit is connected to the air source outdoor unit and your house heating distribution system. It is prepared for connection to a number of different products and accessories, e.g. other external heat source, extra water heater, swimming pool and climate systems with different temperatures.

NIBE HA-WH5-Megacoil

Volume	160/200/300 Litre
Max. operating temperature	85/85/85 °C
Weight	42/45/59 kg
Max. pressure primary side	3/0,3 bar/MPa
Max. pressure water heater	5,5/0,55 bar/MPa

NIBE HA-WH5-Megacoil-Solar

Volume	200/300 Litre
Max. operating temperature	75/75 °C
Weight	49/61 kg
Max. pressure primary side	3/0,3 bar/MPa
Max. pressure water heater	5,5/0,55 bar/MPa

Models

NIBE HA-WH5016-2 F
NIBE HA-WH5020-2 F
NIBE HA-WH5030-2 F
NIBE HA-WH5020-2 FS
NIBE HA-WH5030-2 FS

The NIBE HA-WH5-Megacoil is a range of stainless steel cylinders specifically designed for the NIBE F2040 air source heat pump range. The cylinders incorporate a large heating coil providing maximum heat transfer into the stored water.

The cylinders are available in three single coil versions for use with NIBE F2040 air source heat pumps or traditional gas, oil or biomass boilers, ranging from 160–300 litres. The NIBE HA-WH5-Megacoil cylinders are manufactured from high grade stainless steel. Two twin coil solar versions are available in 200 and 300 litre versions providing up to 70% of the domestic hot water requirements by utilising the free energy provided by the sun.

SYSTEMS USING THE NIBE™ F2040 AIR SOURCE HEAT PUMP

With the new NIBE F2040 range we can provide solutions for all types of domestic dwellings. NIBE offers a broad selection of accessories and complete indoor modules. These have been developed with our air source heat pumps to optimize their efficiency and give you the highest possible savings.

Factors such as the size of your house, where you live and your domestic hot water demand will decide which system solution is most appropriate for you.
NIBE F2040 is delivered with flexible hoses, strainer and heated condensate tray.

PACK 1

The NIBE F2040 together with the VVM 320 creates a complete heating and hot water solution, ideal for new build homes taking up limited space with plug and play installation. The VVM 320 offers a host of features such as; intelligent user friendly new generation controller featuring NIBE Uplink, 180 litre stainless steel hot water cylinder, buffer vessel and low energy speed controlled circulation pumps.

	Pack 1A	Pack 1B
Air Source Heat Pump	NIBE F2040-8 kW	NIBE F2040-12 kW
Hot Water Cylinder	VVM320UK	VVM320UK
Articel Number	PAC20401A	PAC20401B

PACK 2

The NIBE F2040 together with the SMO 20 creates a complete heating and hot water solution, ideal for existing homes. The SMO 20 is part of the New Generation intelligent controllers and is designed for simple docking together with the NIBE HA-WH5-Megacoil single coil cylinders. With full intelligence the SMO 20 with weather compensating control also features temperature optimisation for a comfortable and stable indoor climate and NIBE Uplink.

	Pack 2A	Pack 2B	Pack 2C
Air Source Heat Pump	NIBE F2040-8 kW	NIBE F2040-12 kW	NIBE F2040-16 kW
Control module	SMO 20	SMO 20	SMO 20
3 port valve	VST 05	VST 05	VST 11
Articel Number	PAC20402A	PAC20402B	PAC20402C

PACK 3

The NIBE F2040 together with the SMO 40 creates a complete heating and hot water solution, ideal for existing homes. The SMO 40 is part of the New Generation intelligent controllers and is designed for advanced docking together with the NIBE HA-WH5-Megacoil range of cylinders. The SMO 40 can control up to eight heat pumps together in the same system, control swimming pool heating, separate heating zones and incorporate solar thermal panels. With full intelligence the SMO 40 with weather compensating control also features temperature optimisation for a comfortable and stable indoor climate and NIBE Uplink.

	Pack 3A	Pack 3B	Pack 3C
Air Source Heat Pump	NIBE F2040-8 kW	NIBE F2040-12 kW	NIBE F2040-16 kW
Control module	SMO 40	SMO 40	SMO 40
3 port valve	VST 05	VST 05	VST 11
Articel Number	PAC20403A	PAC20403B	PAC020403C

NIBE™ F2040 INSTALLED IN YOUR HOME

Triple function:
HEATING/COOLING/DOMESTIC HOT WATER
NIBE F2040 – a single system to meet all your heating, cooling and domestic hot water needs.

Indoor unit:
SINGLE, NEATLY PACKAGED MODULE
NIBE has used cutting-edge technology to create an integral system design. The neat indoor module fits into a standard 60 x 66 x 180 cm space.

Electrical installation:
CONTRIBUTES TO EASE OF INSTALLATION
the outdoor unit comes with a pre-wired power cable.

Outdoor unit:
COMPACT SMALL FOOTPRINT
The outdoor unit is small and has an appealing, timeless design.

Flexible positioning:
CHOOSE A DISCREET LOCATION
The outdoor unit can be moved to any location up to 12 metres from the indoor unit, giving you the freedom to select the most suitable position in your yard.

Outdoor unit pre-charged with refrigerant:
EASY INSTALLATION AND ENVIRONMENTALLY-FRIENDLY
The outdoor unit is pre-charged with a refrigerant which has a low environmental impact and does not harm the ozone layer.

Position of heat pump:
CHOICE OF TWO MOUNTINGS
Either wall-mounted or floor standing (using NIBE's stand accessory)

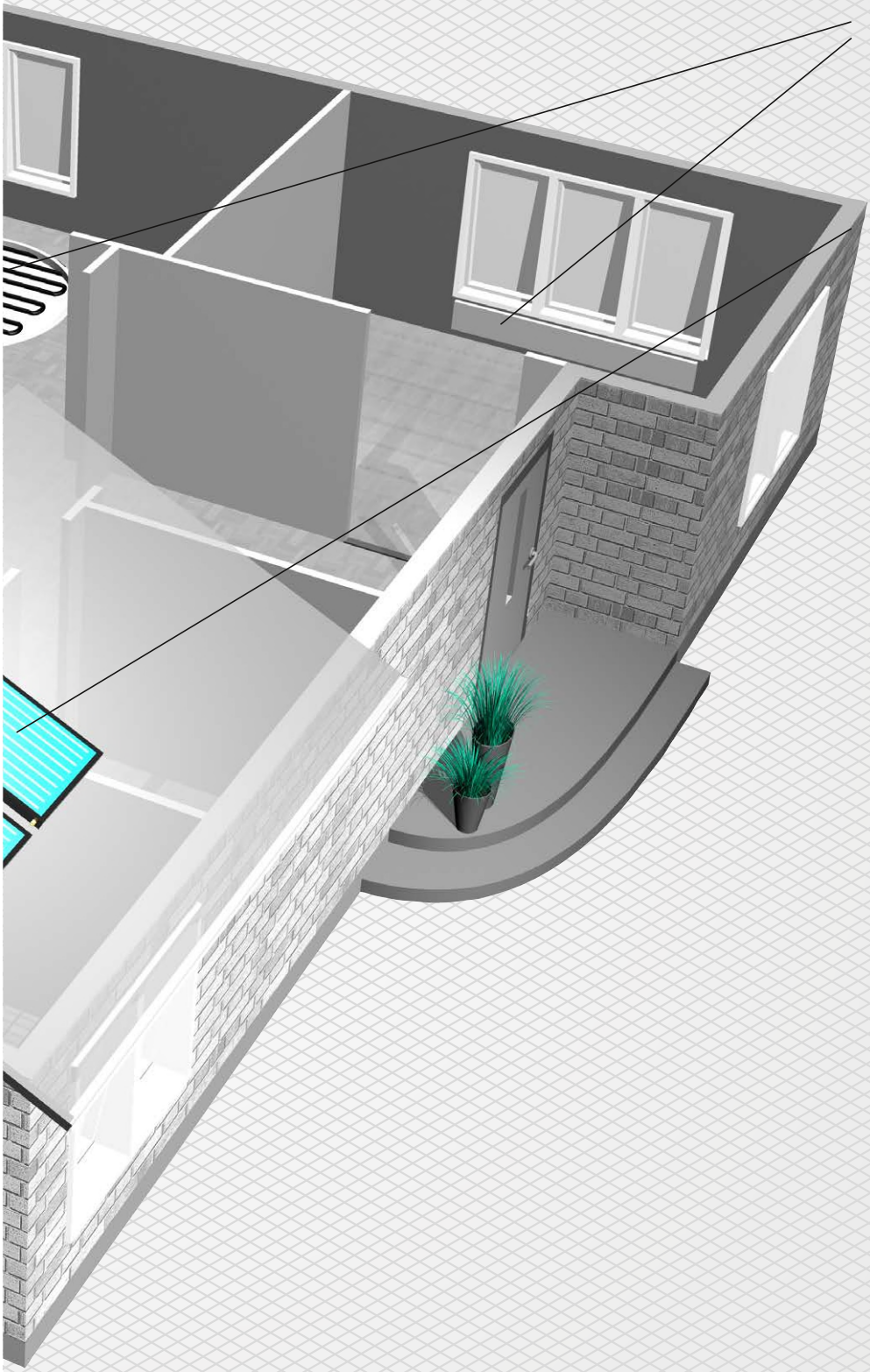

Flexible indoor installation:
SWITCH THE FUNCTION TO SUIT THE SEASON
NIBE F2040 can be used for heating and cooling. Heat is distributed by water moving through radiators or underfloor systems and cooling via fan coils or underfloor systems.

Compatibility:
CONNECTS EASILY WITH OTHER ENERGY SOURCES
NIBE F2040 can be hooked up to solar heating panels or an existing boiler to provide an additional source of energy.

NIBE Uplink™
FREEDOM – ANYWHERE, ANY TIME
Using the Internet and NIBE Uplink you can get a quick overview and the present status of your heat pump and the heating in your property. You get a good overall view where you can follow and control your heating and hot water production. If your system is affected by an operational disturbance you receive an alert via e-mail that allows you to react quickly.
NIBE Uplink also gives you the opportunity to control comfort in your property no matter where you are. We call it NIBE freedom.

Pool heating:
ECONOMICAL POOL HEATING
When the weather is warm, and you do not need the heat pump's full capacity to supply your home's energy needs, why not use it to heat an outdoor swimming pool economically instead? The accessory NIBE Pool 40 is a control unit for this function. If you are planning on using the pump to heat up your pool, remember to inform your VIP installer from the start, as this will influence the size of heat pump required.

CASE 1
ISLE OF ERISKA HILLTOP RESERVES

THE BACKGROUND

The Isle of Eriska Hilltop Reserves are two luxury eco holiday apartments on the west coast of Scotland. Set on an elevated ridge in the 300-acre grounds of the Isle of Eriska Hotel, the one-bedroom, one-bathroom apartments are completely off-grid. While space heating and hot water for the rest of the hotel comes from a large biomass system, piping this uphill to the hilltop development 600 m away was not a viable option – so the challenge was to find a reliable, on-site renewable heating system that would meet guests' heating and hot water needs all year round. Beppo Buchanan-Smith, managing director at the hotel, had done some research into NIBE air source heat pumps, and approached local renewable energy specialist Ferguson Energy for a bespoke solution.

SOLUTION

As the lodges are very well-insulated and fitted with water-based underfloor heating throughout, Barry Ferguson, director at Ferguson Energy, advised that they would be ideally suited to a NIBE F2040 air source heat pump (which operates at similarly low flow temperatures). Having worked with NIBE products before, Ferguson Energy was able to spe cifically recommend the F2040 as the best system to meet the project's needs – both in terms of performance and capital cost.

The team specified, designed, sized and installed the system – which consists of a 16 kW F2040 unit, a 500L VPB hot water cylinder, a UKV 200 buffer tank and SMO 20 intelligent controls. They sited the air source heat pump unit outside a separate, purpose-built plant room (and installed the accompanying hot water cylinder and buffer tank inside the room). This means the whole system is set apart from the lodges themselves.

RESULTS

The system is now fully up and running, and is specially set up to require minimal customer input. Its user-friendly controls are pre-programmed to keep the lodges at a consistent, comfortable temperature of 21 °C during daylight hours and 15 °C at nighttime, with hot water available on demand.

By opting for a 16 kW F2040 unit – which not only has enough capacity to serve the existing two lodges, but could also easily accommodate two more in the future – the Ferguson Energy team have also created a versatile, small-scale district heating system that fits in with plans to grow the development.

CUSTOMER TESTIMONIAL

"As luxury holiday homes, our Hilltop Reserves are sold on a ten-year basis with no maintenance fees. With this in mind, when it came to choosing the right heating system, we were conscious that it not only needed to be high-spec, reliable and easy to operate, but also as cost-effective to run as possible. Our guests expect luxury, and we wanted their heating system to reflect this – providing readily available and dependable hot water and heating whenever it is needed. The system is now fully operational, and we're delighted with the results!"

Beppo Buchanan-Smith, managing director at the Isle of Eriska Hotel.

CASE 2
GREENCROFT

The background

Greencroft is a 19th century farmhouse in Kirkby, North Yorkshire. Owners Pat Battle and Duncan Kirkby, a retired couple, were looking for a more cost-effective alternative to replace their two old oil boilers, which were very inefficient and costly to run. Having heard about NIBE heat pumps from a friend at the local bridge club, they approached Yorkshire renewable heating specialist and NIBE VIP Installer HT Energy for advice on the best setup for their five-bedroom, two-bathroom property.

Solution

Howard Tribick, director at HT Energy, specified, designed and fitted a NIBE F2040 air source heat pump package system after carrying out a full site survey and heat loss calculation for the property.

The new system is made up of two 12 kW F2040 air source heat pumps, a 300 L NIBE Titanium Megacoil hot water storage cylinder and NIBE SMO40 intelligent controls. As part of the install, the loft, walls and floor of the farmhouse were insulated and extra double glazing was fitted. This brought the property to a modern heat-loss standard so that the heat pump could perform to its optimum efficiency. Since the F2040 works to a lower flow temperature than the property's previous system, HT Energy also fitted underfloor heating and re-sized all the radiators for a maximum flow temperature of 45 °C.

Results

The system is now fully up and running. As well as providing a consistent supply of comfortable heating and readily available hot water, it is also expected to cut the farmhouse's bills by more than £1,800 per year compared to the previous oil-based system.

Early calculations also show that the system could qualify for annual payments of up to £1,609 for seven years under the government's Renewable Heat Incentive (RHI) scheme, making it even more cost-effective in the long run.

FURTHER USES FOR YOUR HEAT PUMP

Discover how a NIBE air source heat pump can do more than just heat your home and hot water. Our broad range of accessories makes it possible for you to heat the pool, add solar panels and install a complete system solution in your home.
Ask your NIBE VIP installer for more information.

NIBE™ F2040

NIBE KVR 10

The KVR 10 accessory is used to safely lead away most of the condensation water from the air source heat pump to a frost-free collection point.

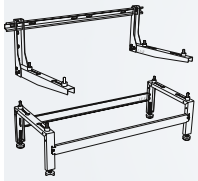

NIBE BRACKET

Choose between two alternative mountings. Either wall-mounted or standing on the ground.

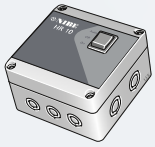

NIBE HR 10

Auxiliary relay HR 10 is a connection box housing a contactor and a rotary selector switch. It is used to control external 1 to 3-phase loads such as oil burners, immersion heaters and pumps.

NIBE UKV RANGE

Buffer vessels for heating systems.

NIBE MODULAR CABLE

NIBE CPD 11

Speed controlled circulation pump.

NIBE AXC 30

Accessory card for cascade dockings.

NIBE™ F2300

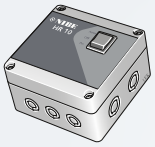

NIBE HR 10

Auxiliary relay HR 10 is a connection box housing a contactor and a rotary selector switch. It is used to control external 1 to 3-phase loads such as oil burners, immersion heaters and pumps.

NIBE KVR 10

The KVR 10 accessory is used to safely lead away most of the condensation water from the air source heat pump to a frost-free collection point.

ACCESSORIES NIBE™ INDOOR MODULES

Even more options to choose from

A NIBE heat pump is not just for heating and hot water. With the addition of various accessories, our new heat pumps can do much more than merely heat your home and hot water. For example, they can be used to cool your home in summer, ventilate it cost-effectively, or even heat your swimming pool. The relevant accessories are dimensioned to fit neatly together, giving the appearance of a single streamlined system. And since all accessories are controlled via the heat pump, you only have to learn to use one operating system.

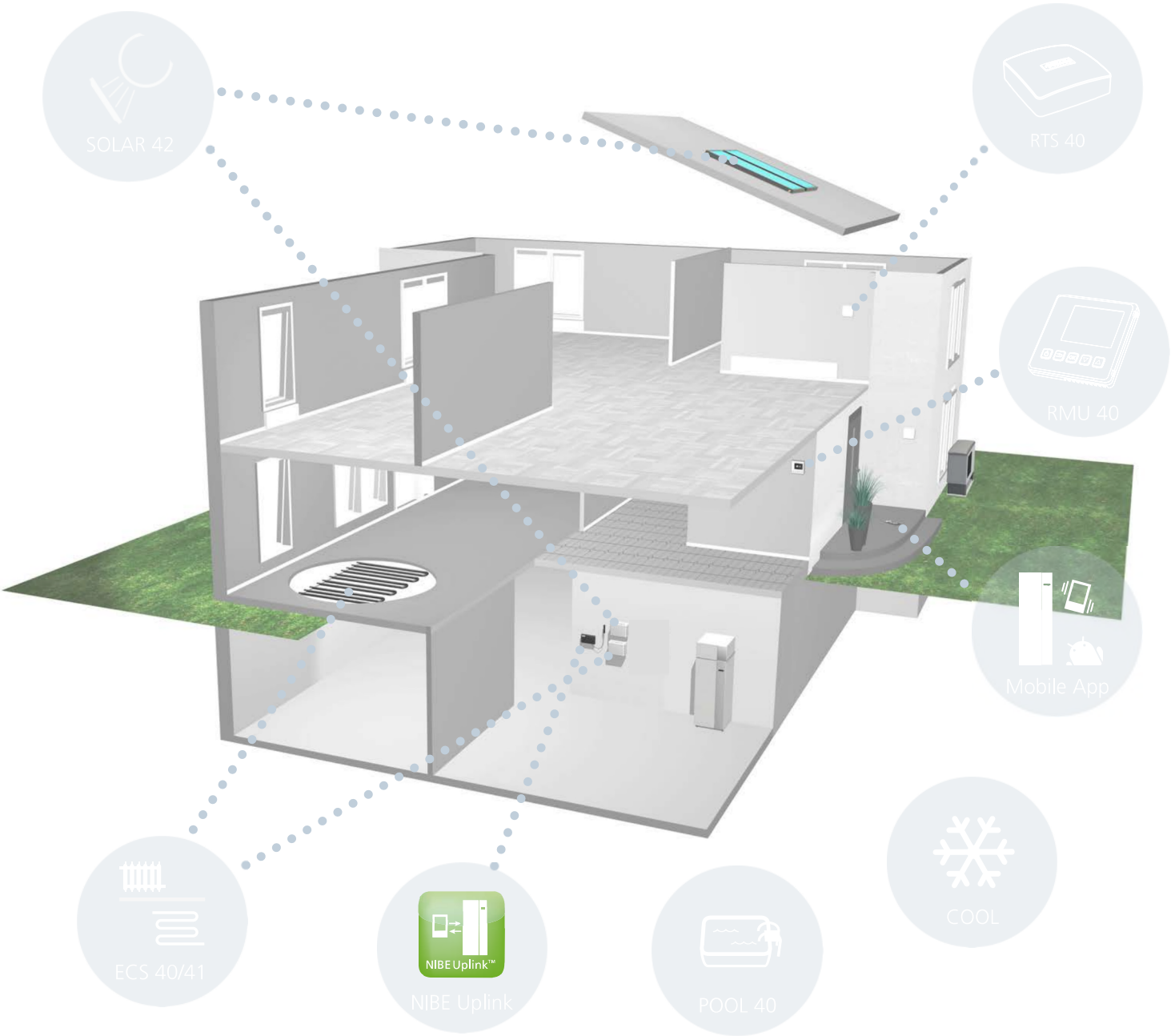

For more information, visit www.nibe.co.uk.

NEW TIMES CALL FOR A NEW APPROACH

We all know we've got to reduce emissions.
The question is how.

'Green' thinking might once have been a luxury but nowadays it is a necessity that none of us can afford to ignore. Increasingly, the reduction of CO_2 emissions is becoming a legal obligation and environmental requirement.

Over 70% of the CO_2 emissions from an average home are caused by its heating and hot water systems. If we are to reduce this figure, we need to start implementing greener, more sustainable technologies across the board. Only then, will we see a significant reduction in CO_2 emissions.

Meanwhile the prices of traditional energy sources are rising steadily, with the result that more and more people are considering alternative, more efficient power sources.

Now that customers have started demanding a solution, builders, architects and property developers can no longer ignore the need to employ alternative technologies that make better use of our planet's energy resources.

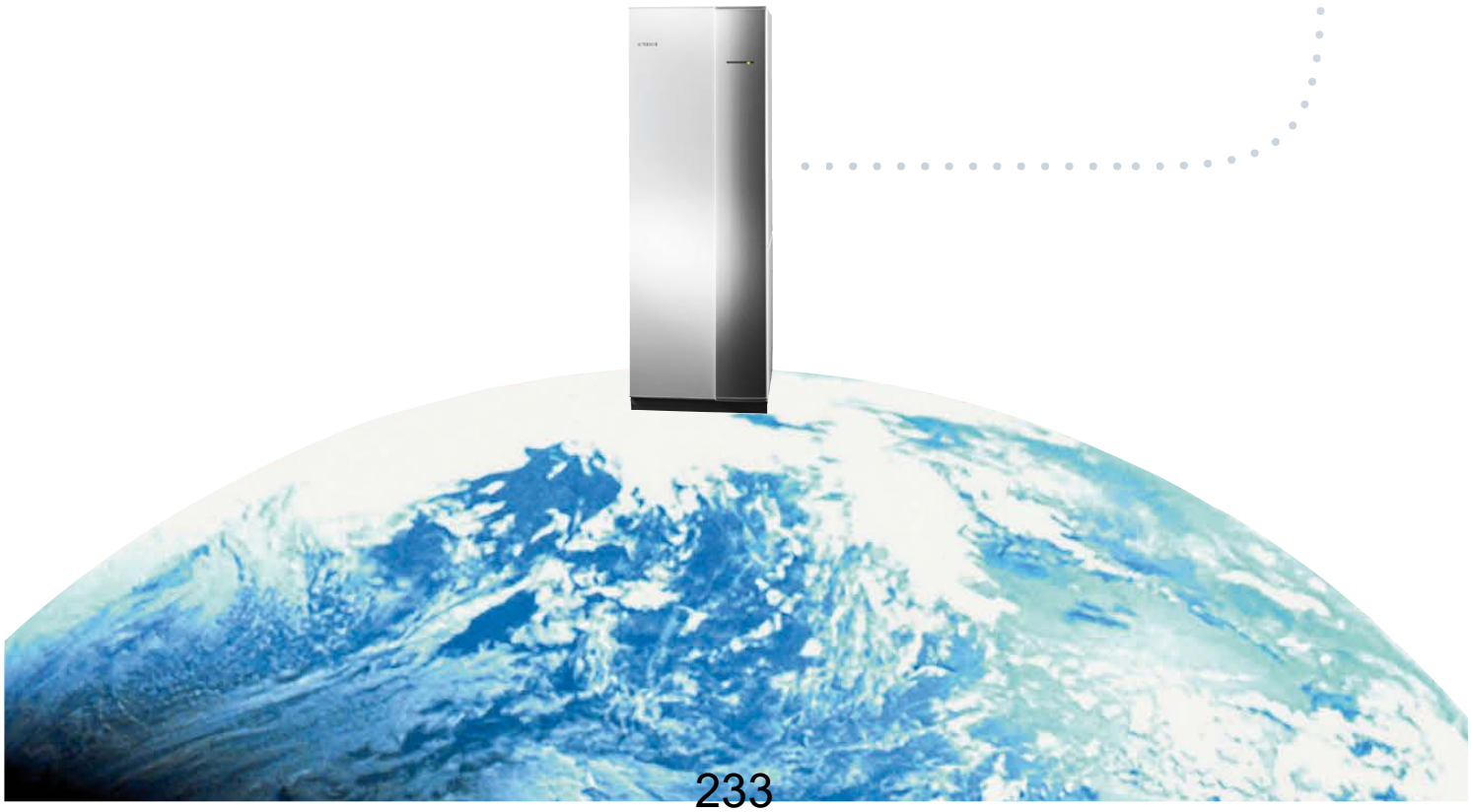

START WITH A HEAT PUMP!

It is a proven fact that heating your house with a heat pump is the best environmental option.

One obvious reason is that a heat pump does not use a combustion process to generate heat. It simply extracts the heat that already exists in the outside air and puts it to use to heat your home. This greatly reduces emissions in comparison to traditional fossil fuel-based systems.

Secondly, the amount of electricity needed is relatively low. That's because electricity is not the main energy source. It is only needed to drive the pump and enable the heat extraction process.

Actual energy savings vary depending on the benchmark, but generally measure between 60% and 75%.

A third point to consider is that heat pumps, like every manufactured item, contain what we call 'embedded energy'. That's the energy required to make and transport the product from the factory to where it will be used. NIBE is continually improving its processes to minimise the amount of embedded energy in its products and seeking more environmentally-friendly ways to build and transport them.

Once installed in your home, a NIBE heat pump immediately starts to deliver an environmental payback in the form of reduced energy consumption and emissions.

Towards a zero carbon future

The drive to reduce the consumption of energy and its impact on the environment is crucial and increasingly important to us all. If you switched to a renewable energy source, such as wind, solar or tidal, you would be taking a step closer towards a zero carbon future.

Classified as renewable energy

Some governments and regional authorities offer subsidies to home owners to switch from fossil fuel-based heating to renewable sources of energy. Since heat pumps are now officially classified as renewable energy, there couldn't be a better time to change!

For more information, please visit the NIBE website in your country.

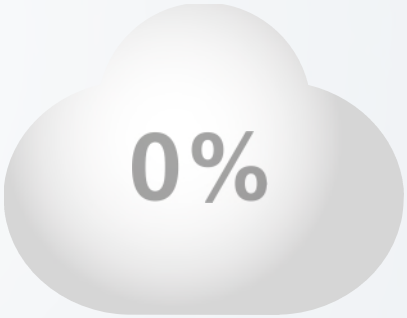

WHY CHOOSE A NIBE VIP INSTALLER?

Once you've chosen the right NIBE system to meet your heating/ventilating needs, the next step is to ensure it is installed correctly so it can perform to its full potential.

As a leading renewables manufacturer, NIBE understands the vital importance of quality installations, which is why we have built an extensive network of highly skilled, trusted installers across the country.

Our NIBE VIP installers are fully trained and accredited to fit our products to the highest possible standards, so you can benefit from optimum results and full peace of mind. They are also MCS certified – an essential requirement to qualify for the government's Renewable Heat Incentive (RHI) payments.

To find a local VIP installer near you visit **nibe.co.uk** and use our 'find a VIP-installer' tool.

NIBE VIP installers:

- Have completed NIBE product training
- Offer an extended warranty
- Have experience fitting NIBE technology
- Are MCS registered (essential requirement for RHI payments)
- Are signed up to NIBE's strict code of practice

Under NIBE's code of practice installers must:

- Perform professionally, competently and responsibly
- Comply with all relevant UK regulations, standards and codes of practice
- Install and commission all NIBE equipment in accordance with all NIBE's procedures and installation manuals
- Complete benchmark check lists for NIBE products
- Fully demonstrate correct system operation and controls to customers
- Register installations on NIBE's website
- Liaise directly with customers and respond to NIBE product enquiries in a quick and proficient manner
- Keep fully up to date with NIBE's product range as well as developments in the UK's plumbing and heating industry

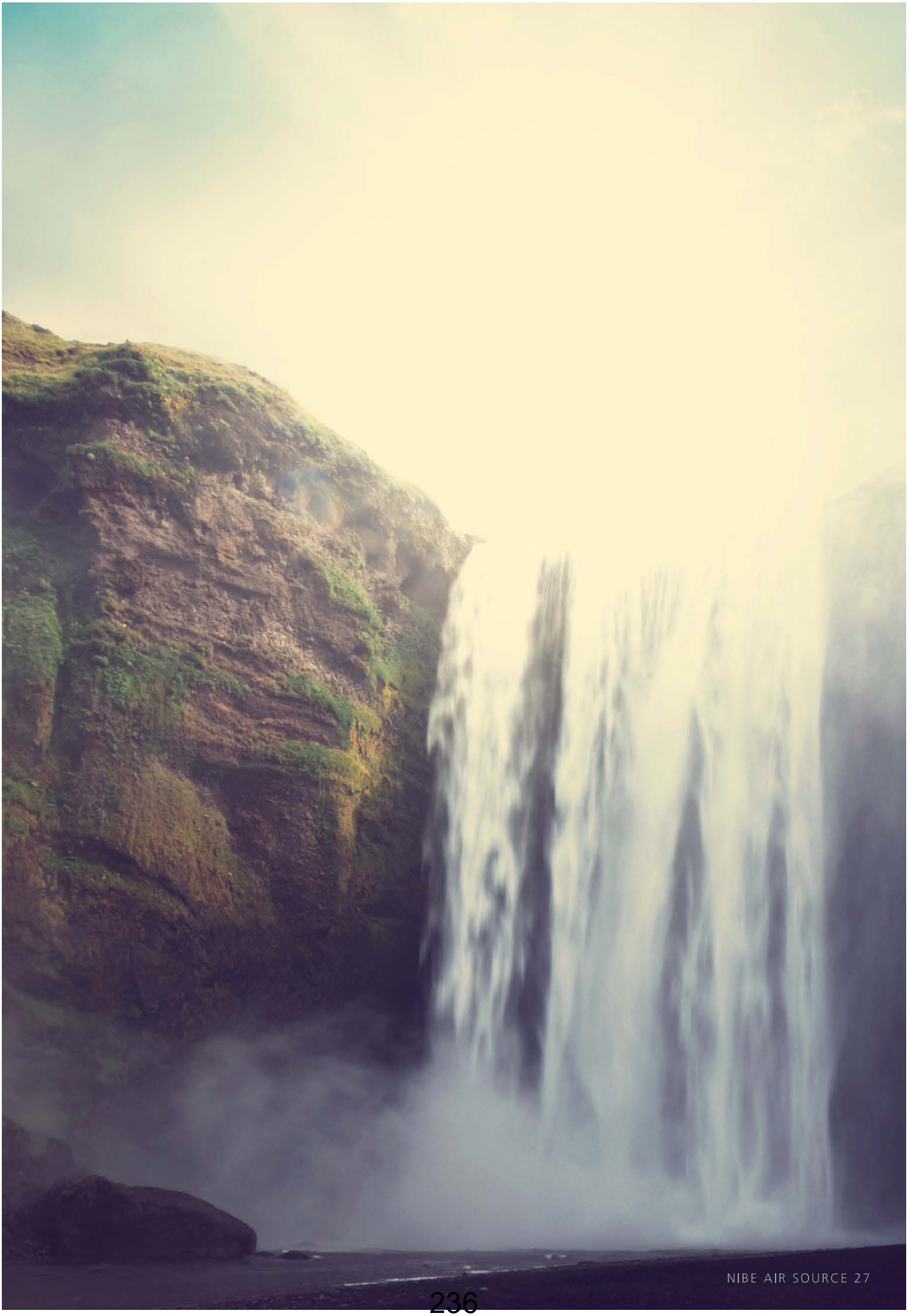

‘Do what you can with what you’ve got’.

Taking heat from the ambient air outside your home, NIBE’s air source heat pumps appear to defy nature.

In fact, the opposite is true; they enable us to live in harmony with nature.

NIBE OF SWEDEN

Living in harmony with nature

The Swedes have a long and impressive track record of clever, money-saving innovations that use resources sparingly. The simple reason for this is that Sweden was historically a poor agrarian country. A harsh winter climate made food scarce for many months, necessitating careful, forward planning.

Today, Sweden is a technologically advanced country with a successful economy, so this is no longer necessary. However, the mindset continues to be manifested in the form of fabulous, cost-saving innovations.

NIBE is a perfect example of the economical Swedish mind at work!

The company was founded by Nils Bernerup in 1952, after a particularly cold winter. Over the past 60 years, it has become Sweden's leading supplier of domestic heating products, continually driving the development of ever-more efficient heating methods.

Early products included water heaters and pressure vessels. Electric boilers joined the range in the 1970s. Heat pumps and a wide selection of other heating products that meet the needs of European markets have been added successively to the company's portfolio.

Nowadays, NIBE has a leading position in the market for heating and cooling solutions around Europe. We are committed to offering innovative solutions that not only save energy but which also reduce CO_2 emissions.

Together with our customers, we're working towards a more sustainable future, one home at a time.

NIBE OFFERS ENERGY FOR LIFE

NIBE is one of Europe's leading manufacturers in the domestic heating sector, offering a wide range of products and solutions to meet every individual need. Our range includes ground source and air source heat pumps, domestic boilers, water heaters and a variety of other products designed to generate and distribute heat.

Ground source heat pumps

Ground source heat pumps extract solar energy which is stored in the soil, bedrock or a nearby water source, thus providing an environmentally friendly alternative for the heating of houses, apartment buildings and other large properties. Our ground source heat pumps are available with or without an integrated water boiler.

Air source heat pumps

Air source heat pumps extract and upgrade the heat from the outside air. Unlike the simpler air/air heat pumps, they can be connected to the building's central heating system to provide both heat and hot water, and in some cases, cooling.

Exhaust air heat pumps

Exhaust air heat pumps can provide your home with heating, hot water and ventilation. Heat is extracted from the outgoing air in the ventilation system then recycled to heat the incoming air and hot water supply.

Biomass Boilers

NIBE offers a range of different boilers that run oil, electricity, pellets or wood. For those who fear dependence on one fuel source, we also offer a combination boiler. This makes it possible for you to choose the cheapest, most plentiful source of energy at any given time. Combine your boiler with an air source heat pump or solar panels for even greater savings.

Solar thermal

Our solar thermal collectors absorb the sun's rays, delivering free, clean energy to your heating system. They become an integral part of your total energy supply supported by our heat pumps which supply this extra free energy in a smart, controlled way. You can also use our solar collectors in combination with a NIBE biomass boiler (logs or pellets) or a NIBE water heater powered by electricity or gas.

Exhaust air heat pumps

Ground source heat pumps

Air source heat pumps

Biomass boilers

Solar thermal

YOUR NEXT STEP?

Find your local NIBE office at www.nibe.eu. They'll help you locate your nearest NIBE installer and select the best kind of heat pump for your needs.

20/20/20

European Directive 20/20/20

The 20/20/20 European directive imposes compulsory targets on the EU's 27 member states, specifying that 20% of energy consumption must be met by renewable sources by 2020. Since NIBEs heat pumps are now classified as a renewable energy source, their installation will help member states reach this ambitious target. And in many cases, local or regional authorities are offering home owners subsidies to switch their existing heating systems to a renewable source such as a heat pump.

M10855 KBR UK NIBE Air/Water 1623-4

ENERGY FOR LIFE

NIBE

This brochure is a publication from NIBE. All product illustrations, facts and specifications are based on current information at the time of the publication's approval. NIBE makes reservations for any factual or printing errors in this brochure.
©NIBE 2016
Photos: www.benfoto.se, Johan Kalén

NIBE ENERGY SYSTEMS LIMITED
Unit 3C, Broom Park, Bridge Way
Chesterfield, S41 9QG
Tel. 0845 095 1200
Fax. 0845 095 1201
www.nibe.co.uk

Jøtul F 162 / F 162 C / F 163 / F 163 C
Manual Version Poo

Jøtul F 162 / F 162 C
Jøtul F 163 / F 163 C

GB	- Installation and Operating Instructions	4
FR	- Manuel d'installation et d'utilisation	15
ES	- Instrucciones para instalación	26
IT	- Manuale di installazione ed uso	37
NL	- Installatie- en montagehandleiding	48

Jøtul F 162

Jøtul F 162 C

Jøtul F 163

Jøtul F 163 C

JØTUL

Manualene må oppbevares under hele produktets levetid. The manuals which are enclosed with the product must be kept throughout the product's entire service life. Les manuels fournis avec le produit doivent être conservés pendant toute la durée de vie du produit. Los manuales suministrados con este producto deben guardarse durante todo el ciclo de vida del producto. I manuali inclusi con il prodotto vanno conservati per l'intera durata di vita del prodotto. Das im Lieferumfang des Produkts enthaltene Begleitmaterial ist über die gesamte Nutzungsdauer aufzubewahren. De bij de haard meegeleverde handleidingen moeten gedurende de volledige gebruiksduur van de haard bewaard blijven.

Meldeskjema og sjekkliste for montering av ildsted

Eiers navn			Tlf.
Eiendommens adresse:			
Post nr.	Sted	Gnr.	Bnr.
Ildstedets navn og type:		Maks. effekt i kW	Brenseltype
Skorsteinstype (eks. tegl, element eller stålskorstein):			
Høyde fra røykinnføring til skorsteinstopp og innvendig diameter): _____ Meter Dia. Ø _____ mm		Antall ildsteder på skorsteinen: _____ Stk.	

Følgende punkter er sjekket under/etter installasjonen:

	OK	Ikke OK
Er ildstedet montert etter monteringsanvisningen?	☐	☐
Er størrelsen/avstand til brannmur i henhold til mont. anvisningen?	☐	☐
Er avstand til brennbart materiale kontrollert?	☐	☐
Er avstand til tak kontrollert?	☐	☐
Er underlagsplate/forplatens størrelse i henhold til mont. anvisningen?	☐	☐
Tåler gulvet vekten av ildsted med omramming?	☐	☐
Er røykinnføring/innmuringsstuss montert?	☐	☐
Er røykrøret montert med stigning fra ildsted mot skorstein?	☐	☐
Er ildstedet sikret tilstrekkelig tilførsel av forbrenningsluft?	☐	☐
Er det fjernet et ildsted?	☐	☐
Er tidligere hull i skorsteinen forskriftsmessig fjernet?	☐	☐
Er ildstedet prøvefyrt og fungerer tilfredsstillende?	☐	☐

Installasjonen er utført av: _____

_____ Sted _____ Dato _____ Eiers signatur

OBS! Husk at huseier plikter å melde fra til kommunen ved Brann og Feiervesen om at ildsted er montert i følge norsk regelverk

Sørg derfor at denne side blir utfylt og at en kopi sendes til det stedlige Brann og Feiervesen samt ta godt vare på originalen da denne er et verdipapir for boligen.

Dette er forutsetningen for at Jøtuls reklamasjonsrett (10 år på utvendige støpejernsdeler, 2 år på dørglass) er gjeldende.

ENGLISH

Table of contents

Installation manual with technical data

1.0 Relationship to the authorities 4

2.0 Technical data 4

3.0 Safety 8

4.0 Installation 9

5.0 Daily use 12

6.0 Service 13

7.0 Maintenance 13

8.0 Optional Equipment 14

9.0 Warranty 14

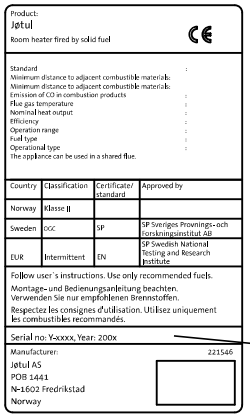
Product:
Jøtul
Room heater fired by solid fuel
CE

Standard :
Minimum distance to adjacent combustible materials:
Minimum distance to adjacent combustible materials:
Emission of CO in combustion products :
Flue gas temperature :
Nominal heat output :
Efficiency :
Operation range :
Fuel type :
Operational type :
The appliance can be used in a shared flue.

Country	Classification	Certificate/ standard	Approved by
Norway	Klasse II		
Sweden	OGC	SP	SP Sveriges Provnings- och Forskningsinstitut AB
EUR	Intermittent	EN	SP Swedish National Testing and Research Institute

Follow user´s instructions. Use only recommended fuels.
Montage- und Bedienungsanleitung beachten.
Verwenden Sie nur empfohlenen Brennstoffen.
Respectez les consignes d'utilisation. Utilisez uniquement les combustibles recommandés.

Serial no: Y-xxxx, Year: 200x

Manufacturer: 221546
Jøtul AS
POB 1441
N-1602 Fredrikstad
Norway

On all our products there is a label indicating the serial number and year. Write this number in the place indicated in the installation instructions.

Always quote this serial number when contacting your retailer or Jøtul.

Serial no.

1.0 Relationship to the authorities

Installation of a fireplace must be according to local codes and regulations in each country.

All local regulations, including those that refer to national and European standards, shall be complied with when installing the product.

Before use read the Installation and Operating Instructions carefully. Prior to using the product the installation must be inspected by a qualified person.

A name plate of heat-resistant material is affixed to the product on the underside of the burnchamber **(Fig. 3 B)**. This contains information about identification and documentation for the product.

2.0 Technical data

	Jøtul F 162 **Jøtul F 162 C**	**Jøtul F 163** **Jøtul F 163 C**
Material:	Cast iron	Cast iron
Finish:	Paint	Paint/enamel
Fuel:	Wood	Wood
Log length, max:	33 cm	33 cm
Flue outlet:	Top/rear	Top/rear
Flue pipe dimension:	Ø150 mm, 177 cm² cross section	Ø150 mm, 177 cm² cross section
Weight F 162 / F 163:	115 kg	115 kg
Weight F 162 C / F 163 C:	134 kg	134 kg
Optional equipment:	Cover for rear leg, soapstone top (not for F 162 C / F 163 C)	Cover for rear leg, soapstone top (not for F 162 C / F 163 C)
Dimensions, distances:	See **fig. 1**	See **fig. 1**

Technical data according to EN 13240

	Jøtul F 162 **Jøtul F 162 C**	**Jøtul F 163** **Jøtul F 163 C**
Nominal heat output:	5 kW	5 kW
Flue gas mass flow:	5,0 g/s	5,0 g/s
Recommended chimney draught:	12 Pa	12 Pa
Efficiency:	83%@5,9 kW	82%@5,9 kW
CO emission (13% O_2):	0,06%	0,10%
CO emission (13% O_2):	792 mg/Nm^3	1242 mg/Nm^3
Flue gas temperature:	260° C	260° C
Operational type:	Intermittent	Intermittent

Intermittent combustion is here taken to mean normal use of a fireplace. I.e. that a new flame chamber is lit as soon as the fuel has burnt down to the appropriate quantity of embers.

Fig. 1a

Jøtul F 162 / Jøtul F 163 / Jøtul F 162 C / Jøtul F 163 C

Jøtul F 162 / Jøtul F 163

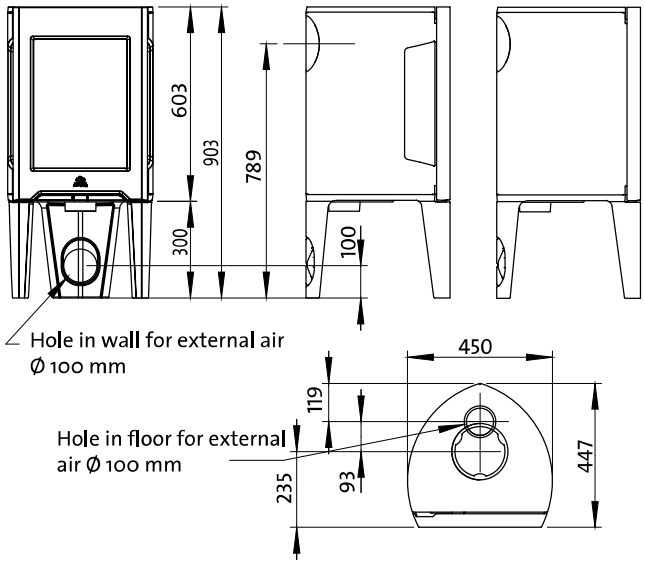

Jøtul F 162 C / Jøtul F 163 C

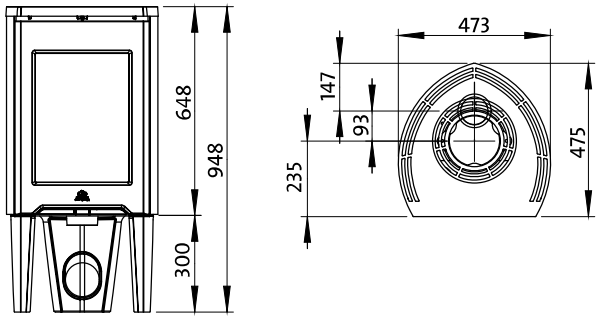

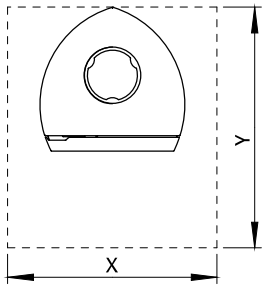

Combustible wall

Min. measurements floor plate X,Y = According to national standards and regulations. See chapter 4.1

Min. distance to combustible wall, base model

Jøtul F 162 / F 163

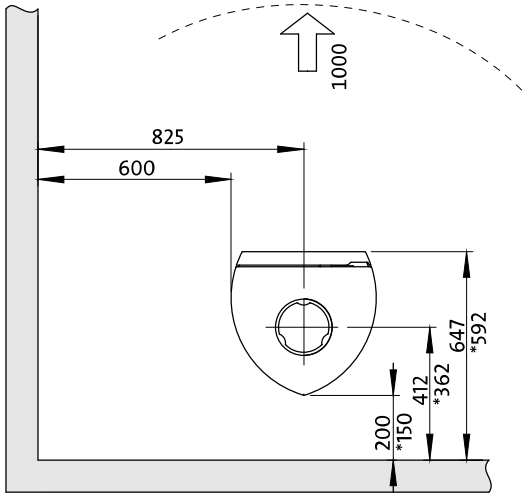

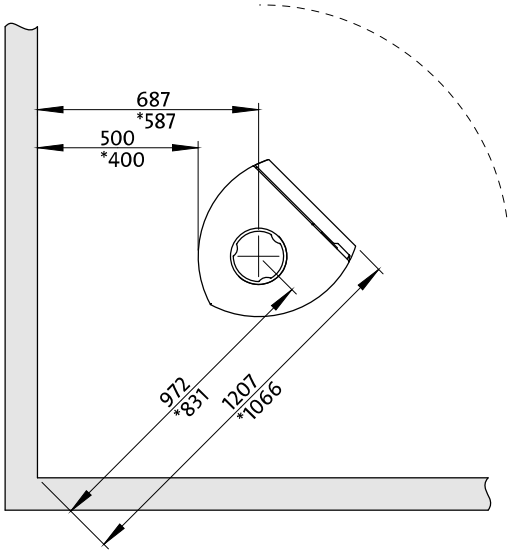

* With semi-insulated chimney / covered flue pipe down towards the product.

Min. distance to combustible wall, convection model

Jøtul F 162 C / F 163 C

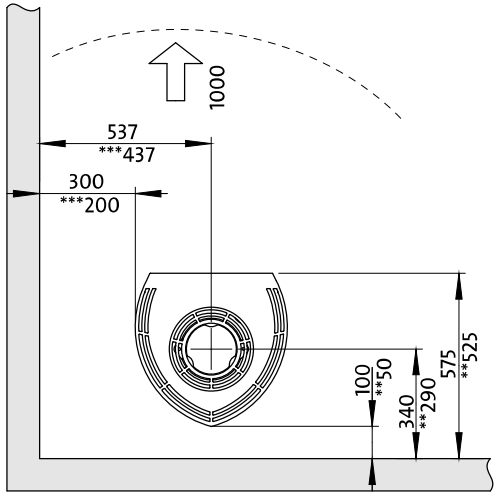

*** for F 162 C only

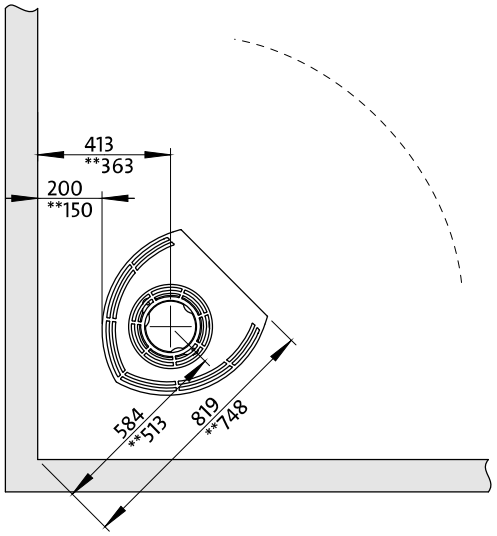

** Jøtul F 162 C / F 163 C with semi-insulated chimney / covered flue pipe down towards the product.

900061-P08

ENGLISH

Fig. 1b

Jøtul F 162 / Jøtul F 163

Min. distance to combustible wall protected by firewall:

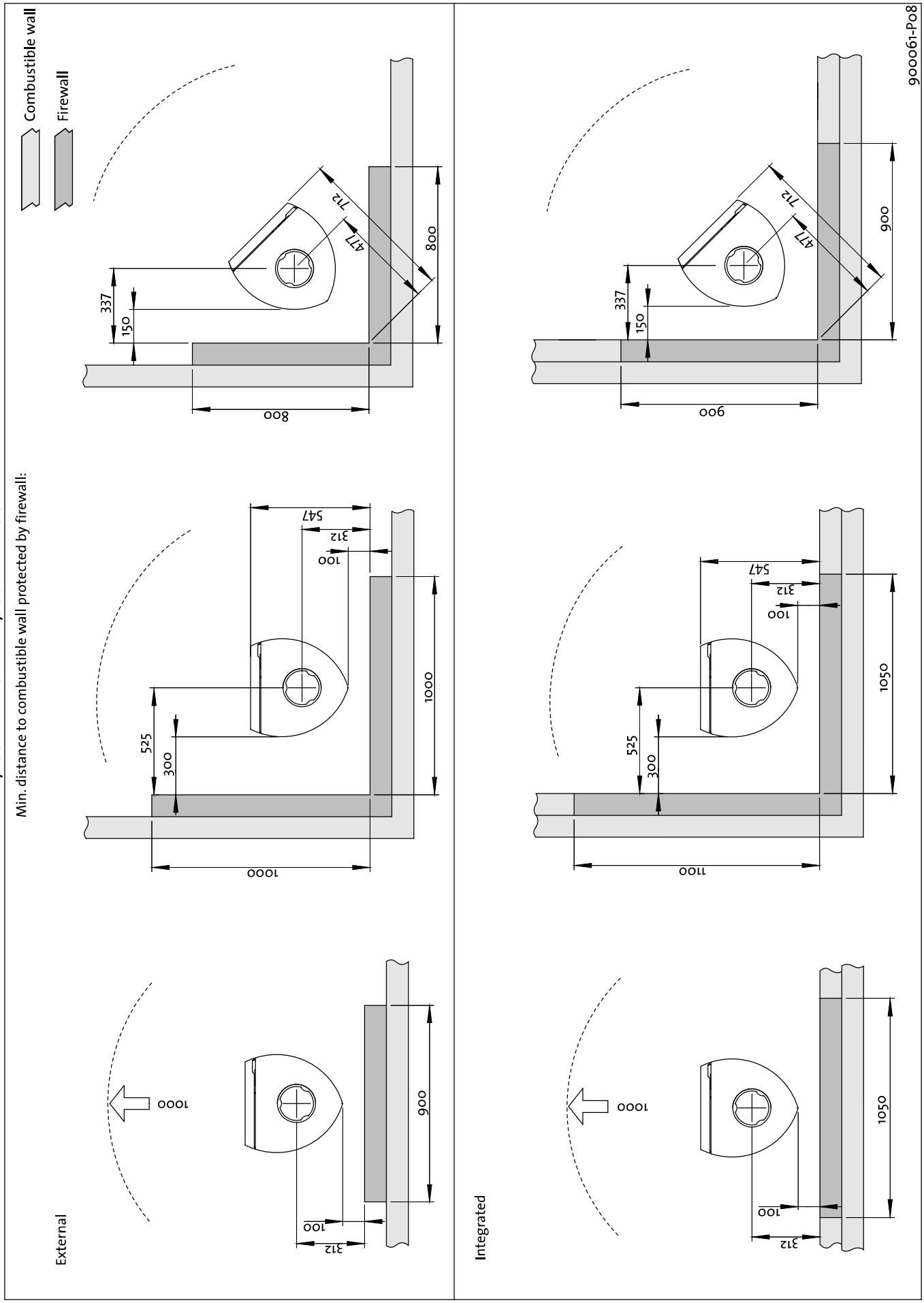

Fig. 1c

Jøtul F 162 C / Jøtul F 163 C

Min. distance to combustible wall protected by firewall:

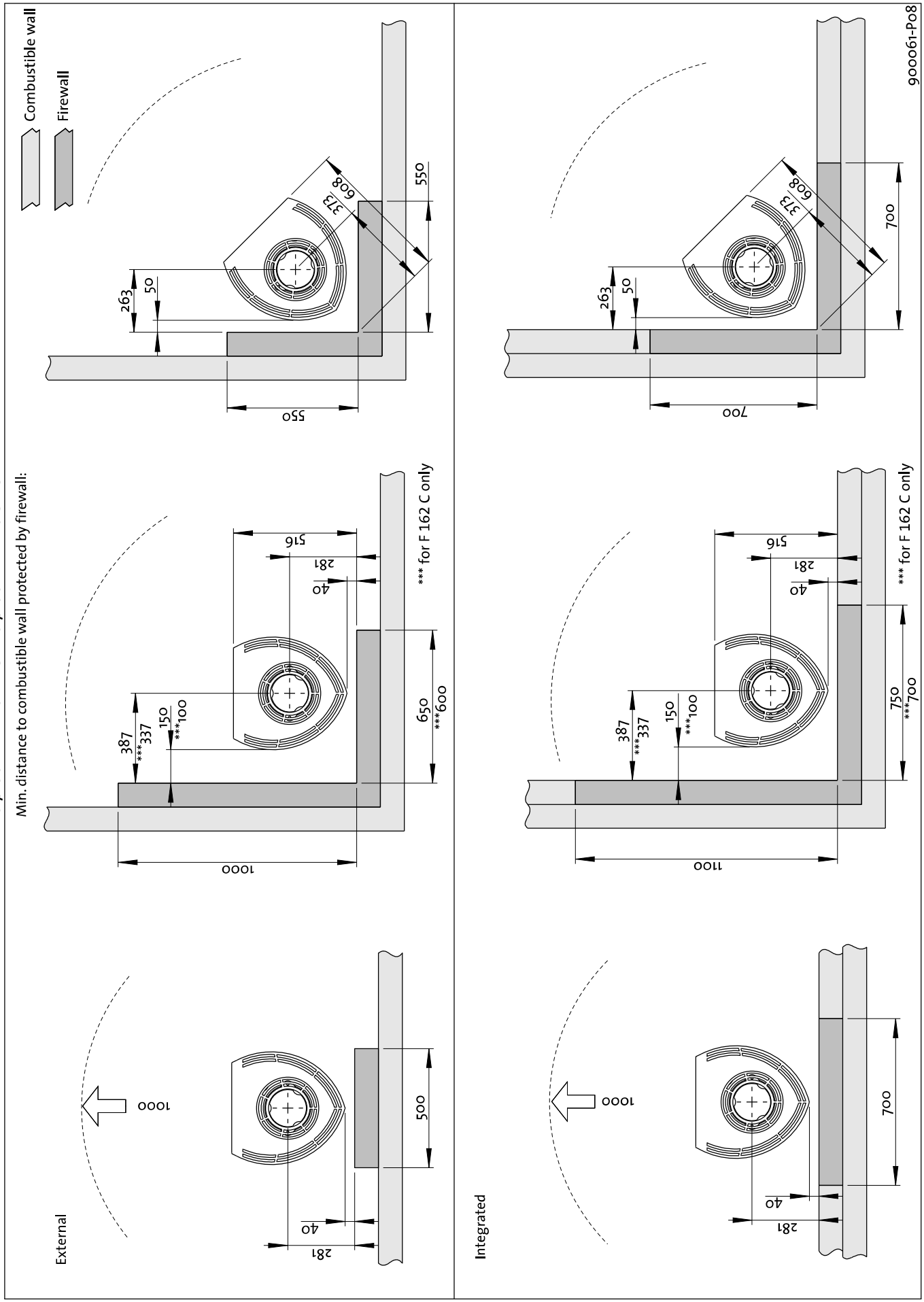

Air supply

The outside air connection may be fitted directly to the product through:

- Through a flexible supply hose from the outside or chimney (only if the chimney has its own duct for external air) and to the product's outside air connector.

Fig. 2a, through an outside wall
Important! The knockout for the outside air connection must be removed from the inside. Use safety goggles.

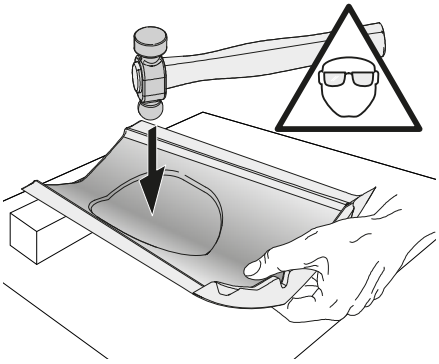

Tip: It is a great advantage if the rear leg is dismounted before removing the knockout.

1. Lay the product carefully down on its side. You can put the cardboard packaging on the floor to protect it from scratches, etc.
2. Remove the rear leg.
3. Use a heavy mallet and strike hard in the middle of the knockout.

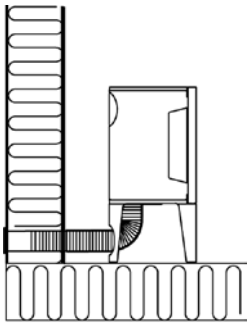

Fig. 2b, through the floor and ground plate

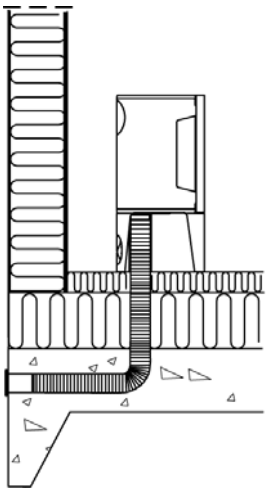

Fig. 2c, through the floor and basement

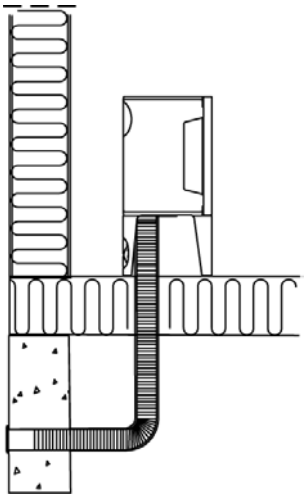

Fig. 2d, indirectly through an outside wall

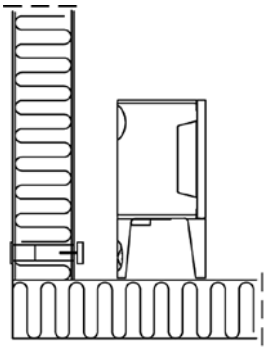

3.0 Safety

NB! To guarantee optimal performance and safety, Jøtul stoves must be fitted by a qualified installer.

Any modifications to the product by the distributor, installer or consumer may result in the product and safety features not functioning as intended. The same applies to the installation of accessories or optional extras not supplied by Jøtul. This may also be the case if parts that are essential to the functioning and safety of the fireplace have been disassembled or removed.

In all these cases, the manufacturer is not responsible or liable for the product and the right to make a complaint becomes null and void.

3.1 Fire Prevention Measures

There is a certain element of danger every time you use your fireplace. The following instructions must therefore be followed:

- The minimum safety distances when installing and using the fireplace are given in **fig. 1**.
- Ensure that furniture and other flammable materials are not too close to the fireplace. Flammable materials should not be placed within 1 metre of the fireplace.
- Allow the fire to burn out. Never extinguish the flames with water.
- The fireplace becomes hot when lit and may cause burns if touched.
- Only remove ash when the fireplace is cold. Ash can contain hot embers and should therefore be placed in a non-flammable container.
- Ash should be placed outdoors or be emptied in a place where it will not present a potential fire hazard.

In case of chimney fire:

- Close all hatches and vents.
- Keep the firebox door closed.
- Check the loft and cellar for smoke.
- Call the fire service.
- Before use after a fire an expert must check the fireplace and the chimney in order to ensure that it is fully functional.

4.0 Installation

N.B. Check that the fireplace is free of any damage prior to commencing installation.
The product is heavy! Make sure you have assistance when erecting and installing the fireplace.

4.1 Floor

Foundations

Ensure that the floor is strong enough for the fireplace. See **«2.0 Technical data»** for weights. It is recommended that flooring which is not fastened to the foundations – so-called floating flooring – is removed during installation.

Combustible floor protection

If the fireplace is to be mounted on a combustible floor, cover the floor under and in front of the fireplace with a plate of metal or other non- combustible material. The recommended minimum thickness is 0,9 mm.
Any flooring made of combustible material, such as linoleum, carpets, etc. should be removed from under the floor plate.

The plate must be in accordance with national laws and regulations.
Contact your local building authority regarding restrictions and installation requirements.

4.2 Walls (fig. 1a)

Distance to wall made of combustible material

You may use the fireplace with an uninsulated flue pipe provided the distances to walls made of combustible materials are as shown in **fig. 1**.
Distance to wall with insulated flue pipe: Se **fig. 1.**

Distance to walls covered by a firewall (fig. 1b and fig. 1c)

Contact your local building authority regarding restrictions and installation requirements.

Firewall requirement
The firewall must be at least **100 mm** thick and be made of brick, concrete-stone or light concrete. Other materials and constructions with satisfactory documentation may also be used.

Distance to non combustible walls

By non combustible one means a non load-bearing wall of solid brickwork/concrete.

Contact your local building authority regarding restrictions and installation requirements.

4.3 Chimneys and flue pipes

- The fireplace can be connected to a chimney and flue pipe approved for solid fuel fired appliances with flue gas temperatures specified in **«2.0 Technical data»**.
- The chimney's cross-section must be at least as big as the flue pipe's cross-section. See **«2.0 Technical data»** when calculating the correct chimney cross-section.
- Several solid fuel fired appliances can be connected to the same chimney if the chimney's cross-section is sufficient.
- Connection to the chimney must be carried out in accordance with the installation instructions from the supplier of the chimney.
- Before making a hole in the chimney the fireplace should be test-mounted in order to correctly mark the position of the fireplace and the hole in the chimney. See **fig. 1** for minimum dimensions.
- Ensure that the flue pipe is inclined all the way up to the chimney.
- Use a flue pipe bend with a sweeping hatch that allows it to be swept.

Be aware of the fact that it is particularly important that connections have a certain flexibility in order to prevent movement in the installation leading to cracks.

N.B. A correct and sealed connection is very important for the proper functioning of the product.

Chimney draught; See «2.0 Technical data». If the draught is too strong you can install and operate a flue damper to control the draught.

4.4 Assembly prior to installation

The product is delivered in a single packing case.
After unpacking the stove check that the stove is free of any damage and that the regulating handles works.

4.5 Selfclosing doormechanism

The product is delivered with a selfclosing doormechanism. If wanted this can be removed.

Fig. 3

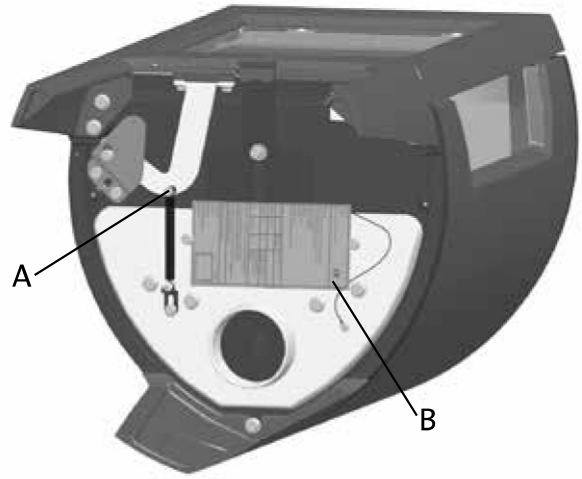

1. Unscrew the screw and nut **(fig. 3 A)**.
2. Unhook and remove the spring.

4.6 Fitting the flue pipe with the rear outlet

The product is supplied from the factory with the smoke outlet fitted for the top outlet.

NB! Proceed as follows for installation with a rear outlet:

Fig. 4

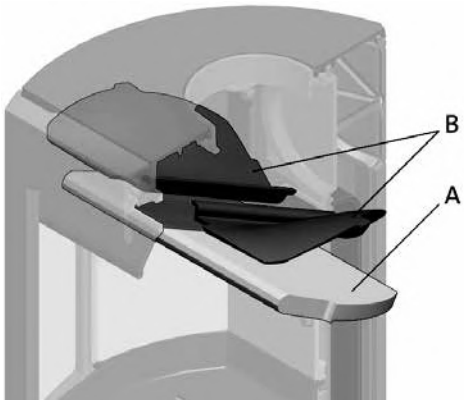

1. Lift the baffle **(Fig. 4 A)** up carefully.
2. Remove one of the side burn plates by lifting them up a little and then out. (Be aware if using tools, that vermiculite plates may be damaged by rough handling).
3. Remove the baffle.
4. Remove the other side burn plate.
5. Remove the exhaust deflectors **(Fig. 4 B)**.

Fig. 5

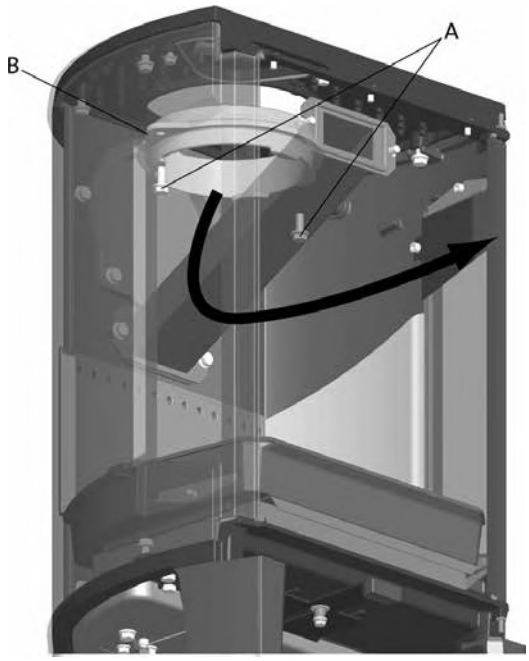

6. Unscrew the screws **(fig. 5 A)** and remove the smoke outlet **(fig. 5 B)** from the top outlet from the inside of the burn chamber.

Fig. 6a

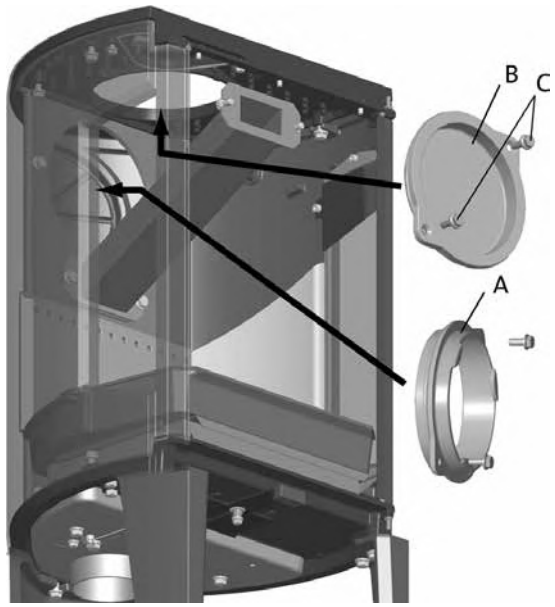

7. Unscrew the screws **(fig. 6a C)** and remove the cover **(fig. 6a B)** from the rear outlet from the inside of the burn chamber.

Fig. 6b

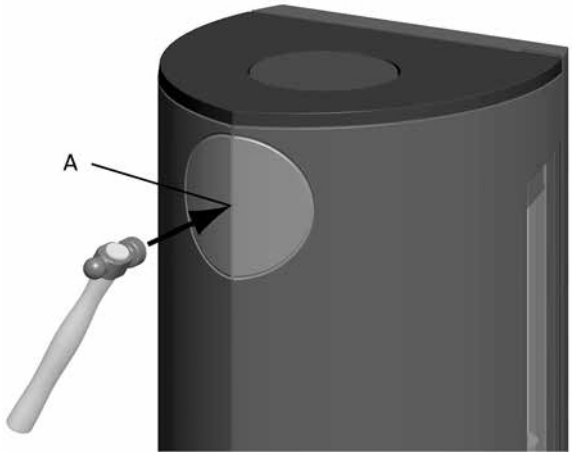

8. Knock out the removable cover plates **(fig. 6b A)**.
9. Attach the smoke outlet **(fig. 6a A)** on the inside of the burn chamber where the cover was.
10. Install the cover **(fig. 6a B)** where the smoke outlet was.
11. Refit the exhaust deflectors **(fig. 4 B)** and the baffle plate **(fig. 4 A)**.

4.7 Control of functions

When the product is set up, always check the control functions. These shall move easily and function satisfactorily.

Jøtul F 162, F 162 C, F 163 and F 163 C are equipped with the following control:

Ignition vent/air vent

Ignition

Fig. 7a

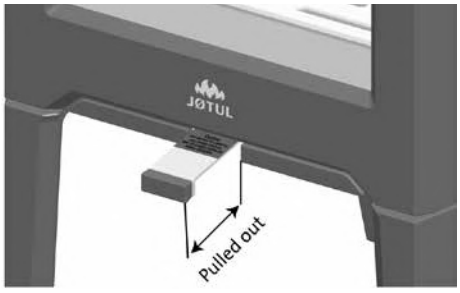

- Open the ignition vent and air vent by pulling the handle all the way out. (Use a glove or something similar to protect your hand in case the handles are hot.)

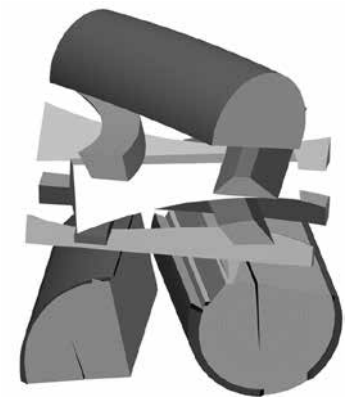

- Place two logs at the bottom of the burn chamber and pile the kindling in layers.
- Finally, place a medium-sized log on the top of the pile.
- Place 2 or 3 briquettes or kindling sticks under the top layer of kindling and light the fire.

Heating

Fig. 7b

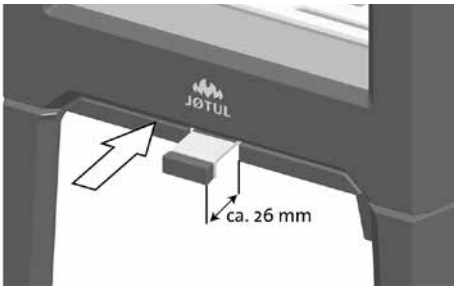

- Leave the ignition-/air vent 26 mm **(fig. 7 B)** open when the wood has caught fire properly and is burning well.
- Close the door.
- You can then regulate the rate of combustion to give the heat you want by adjusting the air vent.
- Check that the afterburning (secondary combustion) starts. This is best indicated by yellow, flickering flames in front of the holes under the baffle.

Adding firewood

Stoke the stove frequently but only add small amounts of fuel at a time. If the stove is filled too full, the heat created may cause extreme stress in the chimney. Add fuel to the fire in moderation. Avoid smouldering fires as this produces the most pollution. The fire is best when it is burning well and the smoke from the chimney is almost invisible.

4.7 Danger of overheating

The fireplace must never be used in a manner that causes overheating

Overheating occurs when there is too much fuel and/or too much air so that too much heat develops. A sure sign of overheating is when parts of the fireplace glow red. If this happens, reduce the air vent opening immediately.
Seek professional advice if you suspect that the chimney is not drawing properly (too much/too little draught). For further information, see **«4.0 Installation»** (Chimney and flue pipe).

5.0 Daily use

Odours when using the fireplace for the first time

When the fireplace is used for the first time, it may emit an irritating gas which may smell slightly. This happens because the paint dries.The gas is not toxic but the room should be thoroughly ventilated. Let the fire burn with a high draught until all traces of the gas have disappeared and no smoke or odours can be detected.

5.1 Operation

Heating advice

NB: Logs that have been stored outdoors or in a cold room should be brought indoors 24 hours before use to bring them up to room temperature.
There are various ways of heating the stove but it is always important to be careful about what you put in the stove. See the section on **"Wood quality"**.

Wood quality

By quality wood we mean most well-known types of wood such as birch, spruce and pine.

The logs should be dried so that the moisture content is no more than 20%.
To achieve this, the logs should be cut during the late winter. They should be split and stacked in a way that ensures good ventilation. The wood stacks should be covered to protect the logs from rain. The logs should be brought indoors during early autumn and stacked/stored for use in the coming winter.

Be especially careful never to use the following materials as fuel in your fireplace:
- Household rubbish, plastic bags, etc.
- Painted or impregnated timber (which is extremely toxic).
- Laminated wooden planks.
- Driftwood

These may harm the product and are also pollutants.

NB: Never use petrol, paraffin, methylated spirit or similar liquids to light the fire. You may cause serious injury to yourself and damage to the product.

Wood consumption

Use of wood, with nominal heat emission: Approx. **1,6 kg/h**. Another important factor for proper fuel consumption is that the logs are the correct size. The size of the logs should be:

Kindling:
Length: 23-33 cm
Diameter: 2 - 5 cm
Amount per fire: 6 - 8 pieces

Daily use

Firewood (split logs):
Length: 23 - 33 cm
Diameter: Approx. 8 cm
Intervals for adding wood: Approximately every 45 minutes

Size of the fire: 1,2 kg
Amount per load: 2 pieces

Nominal heat emission is achieved when the air vent is open approximately 57 %.

Maximum use

Max. load: 2,9 kg/h (max. 3 pieces per loac/2,2 kg per load)

5.2 Ash removal

Jøtul F 162 / F 162 C / F 163 / F 163 C have an ash pan which makes it easy to remove the ash.

Fig. 8

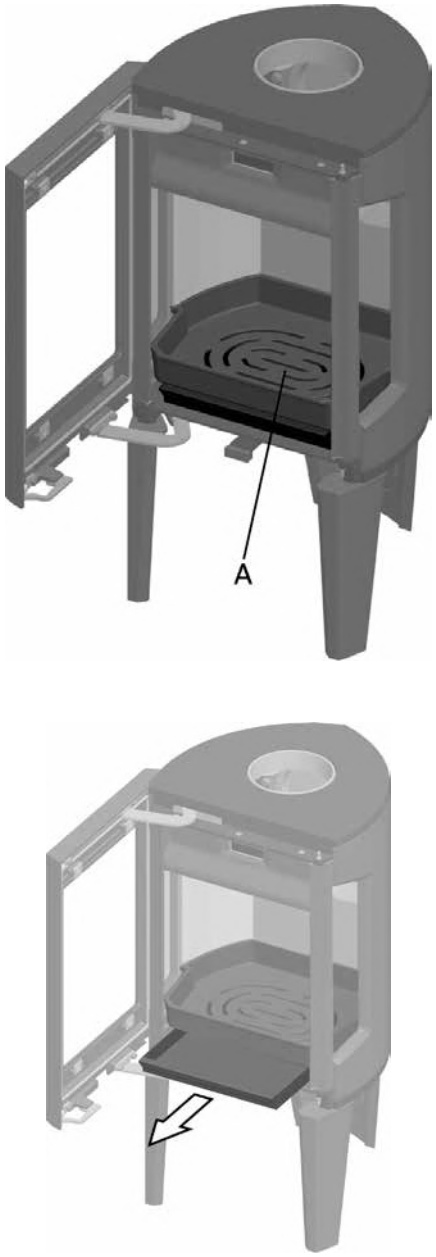

1. Scrape the ash through the grate **(fig. 8 A)** in the base plate and into the ash pan. Use a glove to grab the handle on the ash pan.
2. Make sure that the ash pan doesn't fill up so high that it keeps ash from coming through the grate into the pan.

6.0 Service

Warning! Any unauthorised change to the product is not allowed. Only use original spare parts.

6.1 Changing the burn plates/inner bottom plate

Fig.9

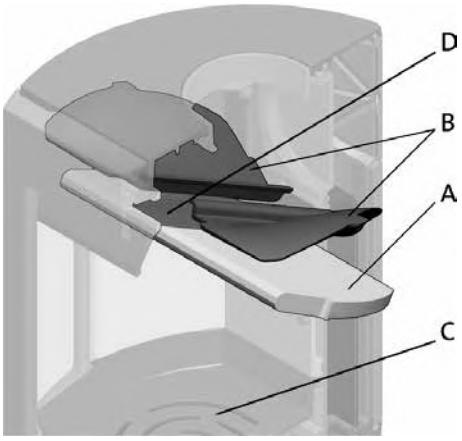

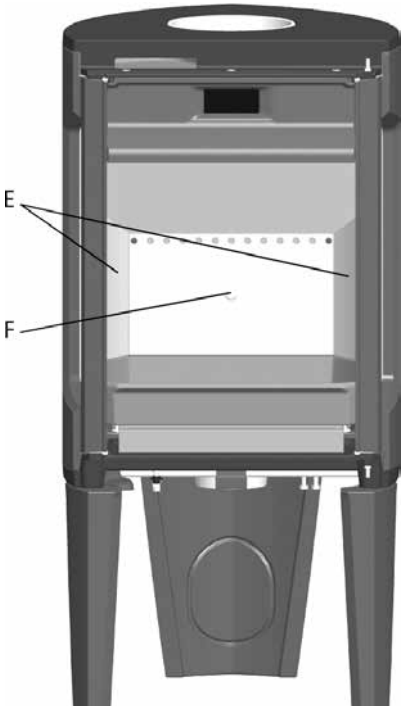

1. Lift the baffle **(Fig. 9 A)** up carefully.
2. Remove one of the side burn plates **(Fig. 9 E)** by lifting them up a little and then out. (Be aware if using tools, that vermiculite plates may be damaged by rough handling).
3. Remove the baffle.
4. Remove the other side burn plate.
5. Unscrew the M8x25 mm screw on the rear burn plate **(Fig. 9 F)** and remove the burn plate.
6. Then lift up and remove the inner bottom plate **(Fig. 9 C)**.

Follow the same procedure for installation, but in the opposite sequence.

6.2 Changing the baffle plate

- Follow step 1 -3 under **Fig. 9**.
- Access is then easy to the smoke deflectors **(Fig. 9 B)** if they need to be removed. They are situated on 1 knob on the side and on the air manifold **(fig. 9 D).**
- Edge them down and remove them through the door.

For re-installation follow the same procedure in the opposite sequence.

7.0 Maintenance

7.1 Cleaning and soot removal

Soot deposits may build up on the internal surfaces of the fireplace during use. Soot is a good insulator and will therefore reduce the fireplace's heat output. If soot deposits accumulate when using the product, they can easily be removed by using a soot remover.

In order to prevent a water and tar layer from forming in the fireplace, you should regularly allow the fire to burn hot in order to remove the layer. An annual internal cleaning is necessary to get the best heating effect from your product. It is a good idea to do this when cleaning the chimney and flue pipes.

7.2 Sweeping flue pipes to the chimney

Flue pipes must be swept through the flue pipe sweeping hatch or through the door opening.

One of the baffles will have to be removed first in order to do this.

7.3 Inspection of the fireplace

Jøtul recommends that you carefully inspect your fireplace yourself after it has been swept/cleaned. Check all visible surfaces for cracks. Also check that all joints are sealed and that the gaskets are in the correct position. Any gaskets showing signs of wear or deformation must be replaced.

Thoroughly clean the gasket grooves, apply ceramic glue (available from your local Jøtul dealer) and press the gasket well into place. The joint will dry quickly.

7.4 Exterior maintenance

Painted products may change colour after several years' usage. The surface should be cleaned and brushed free of any loose particles before new paint is applied.

8.0 Optional equipment

8.1 Leg cover - outside air connection

Cat. no. 51012329

8.2 Soapstone top - 50 mm, complete

Important! Soapstone top can not be used with Jøtul F 162 C / Jøtul F 163 C.
Cat. no. 51012327

9.0 Warranty

Jøtul AS provides its customers with a ten-year warranty with the right to return external cast-iron items if they show defects as a result of faulty materials and/or manufacturing after the initial purchase/installation of the fireplace. The buyer is entitled to return the goods provided that the fireplace has been installed in compliance with current laws and regulations and in compliance with Jøtul's installation and operating instructions.

The warranty does not cover:

The installation of optional extras, for example, to rectify local draught conditions, air supply or other circumstances beyond Jøtul's control. The warranty does not cover consumables, such as burn plates, smoke baffles, fire grates, bottom grates, brick refractories, dampers and gaskets as they deteriorate over time due to normal wear and tear. The warranty does not cover damage caused as a result of using unsuitable fuel when lighting the fire, such as driftwood, impregnated and painted wood, plank offcuts, chipboard, etc. Overheating may easily occur if unsuitable fuel is used, i.e. the fireplace becomes red hot, which causes the paint to discolour and the cast iron parts to crack.

The warranty is not valid for damage caused while the product is in transit from the distributor to the delivery address. The warranty is not valid either for damage caused by the use of non-original parts.

Table des matières

Manuel d'installation et données techniques

1.0 Relations avec les autorités 15

2.0 Caractéristiques techniques 15

3.0 Sécurité 19

4.0 Installation 20

5.0 Utilisation au quotidien.....23

6.0 Entretien 24

7.0 Maintenance 25

8.0 Équipements en option 25

9.0 Garantie.....25

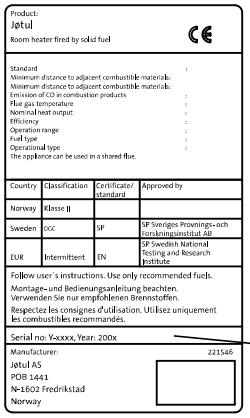
Product:
Jøtul
Room heater fired by solid fuel
CE

Standard :
Minimum distance to adjacent combustible materials:
Minimum distance to adjacent combustible materials:
Emission of CO in combustion products :
Flue gas temperature :
Nominal heat output :
Efficiency :
Operation range :
Fuel type :
Operational type :
The appliance can be used in a shared flue.

Country	Classification	Certificate/ standard	Approved by
Norway	Klasse II		
Sweden	OGC	SP	SP Sveriges Provnings- och Forskningsinstitut AB
EUR	Intermittent	EN	SP Swedish National Testing and Research Institute

Follow user's instructions. Use only recommended fuels.
Montage- und Bedienungsanleitung beachten.
Verwenden Sie nur empfohlenen Brennstoffen.
Respectez les consignes d'utilisation. Utilisez uniquement les combustibles recommandés.

Serial no: Y-xxxx, Year: 200x

Manufacturer: 221546
Jøtul AS
POB 1441
N-1602 Fredrikstad
Norway

Tous nos produits sont fournis avec une étiquette indiquant le numéro de série et l'année. Reportez ce numéro à l'endroit indiqué dans les instructions d'installation.

Mentionnez toujours ce numéro lorsque vous contactez votre revendeur ou Jøtul.

Serial no.

1.0 Relations avec les autorités

L'Installation d' un poêle doit être conforme aux codes du bâtiment et régulations locales de chaque pays.

Toutes les régulations locales, y compris celles relatives aux normes nationales et européennes, devront être respectées au moment d'installer l'appareil.

Veuillez lire attentivement le manual d'installation et d'utilisation avant de procéder à l'installation. Avant toute mise en service de l'appareil, l'installation devra avoir été agréée par un professionnel qualifié, suivant les pays..

Une plaque signalétique thermorésistante se trouve sur le bouclier thermique, sous l'appareil **(fig. 3 B)**. Elle comporte les informations suivantes : fabricant, adresse, nom du produit, référence catalogue, norme de fabrication, référence de production et puissance.

2.0 Données techniques

	Jøtul F 162 **Jøtul F 162 C**	**Jøtul F 163** **Jøtul F 163 C**
Matériau :	Fonte	Fonte
Finition :	Peinture	Peinture/email
Combustible :	Bois exclusivement	Bois exclusivement
Longueur max. des bûches :	33 cm	33 cm
Sortie de fumée :	Dessus/ derrière	dessus/dessrière
Conduit de raccordement :	Ø 150 mm/177 cm^2 section transversale	Ø150mm/177cm^2 section transversale
Poids F 162 et F 163 :	115 kg	115 kg
Poids F 162 C et F 163 C:	134 kg	134 kg
Équipements en option :	Cache pour pied arrière, dessus en pierre ollaire : complet (pas pour F 162 C / F 163 C)	Cache pour pied arrière, dessus en pierre ollaire : complet (pas pour F 162 C / F 163 C)
Dimensions, distances :	Voir **fig. 1**	Voir **fig. 1**

Données techniques conformes à la norme EN 13240 :

	Jøtul F 162 **Jøtul F 162 C**	**Jøtul F 163** **Jøtul F 163 C**
Puissance nominale :	5 kW	5 kW
Débit massique des fumées:	5,0 g/s	5,0 g/s
Tirage de cheminée recommandé :	12 Pa	12 Pa
Rendement :	83%@5,9 kW	82%@5,9 kW
Émissions CO (13 % O2):	0,06%	0,10%
Émissions CO (13 % O2):	792 mg/Nm^3	1242 mg/Nm^3
Température des gaz de fumées :	260° C	260° C
Mode de fonctionnement :	Intermittent	Intermittent

"Combustion intermittente" signifie ici une utilisation normale de la cheminée, c'est-à-dire qu'une nouvelle flambée est initiée dès que le combustible a été réduit à la quantité de braises appropriée.

Jøtul F 162 / Jøtul F 163 / Jøtul F 162 C / Jøtul F 163 C

Fig. 1a

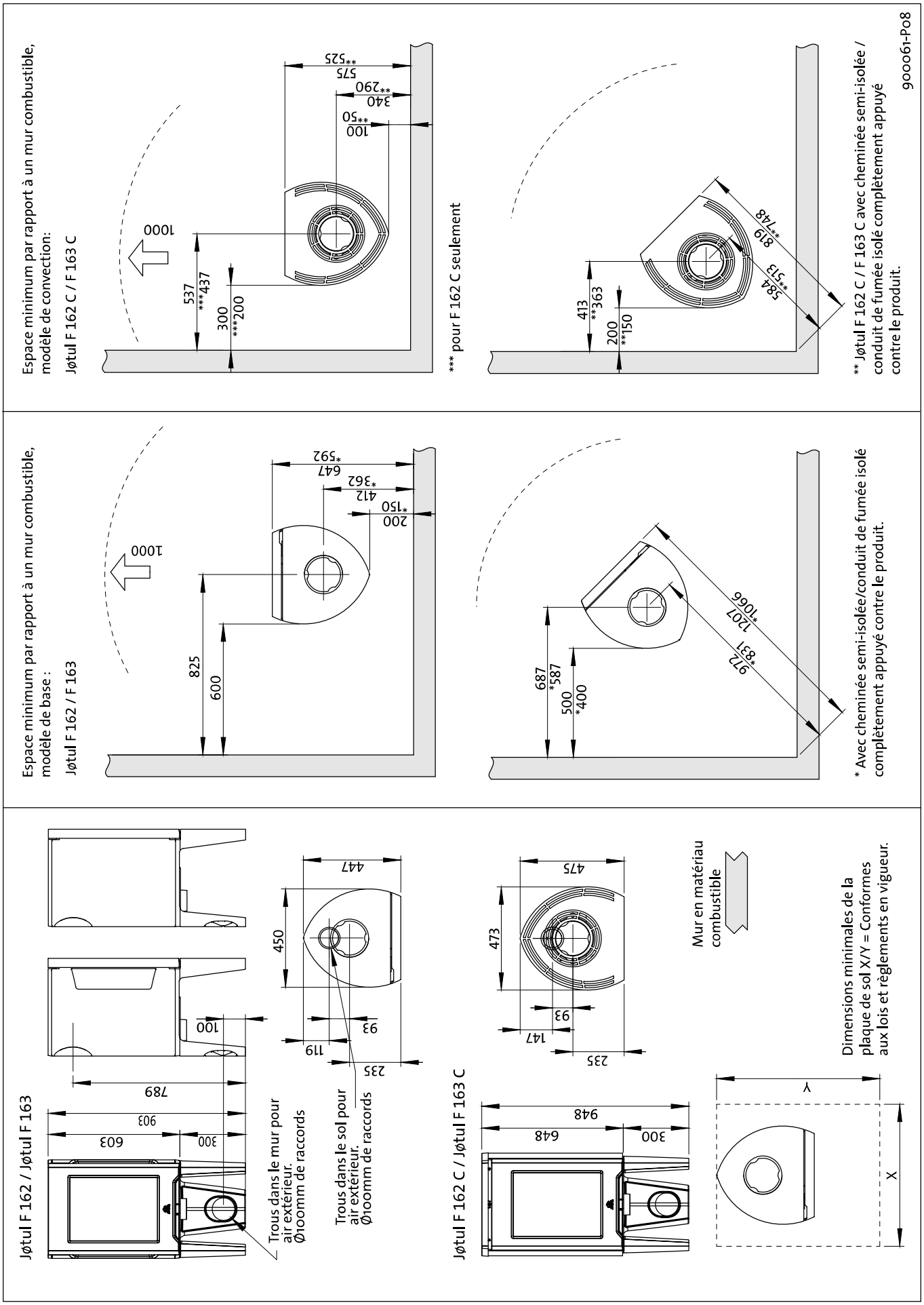

Fig. 1b

Jøtul F 162 / Jøtul F 163

Distance minimale par rapport au mur en matériau combustible protégé par un pare-feu

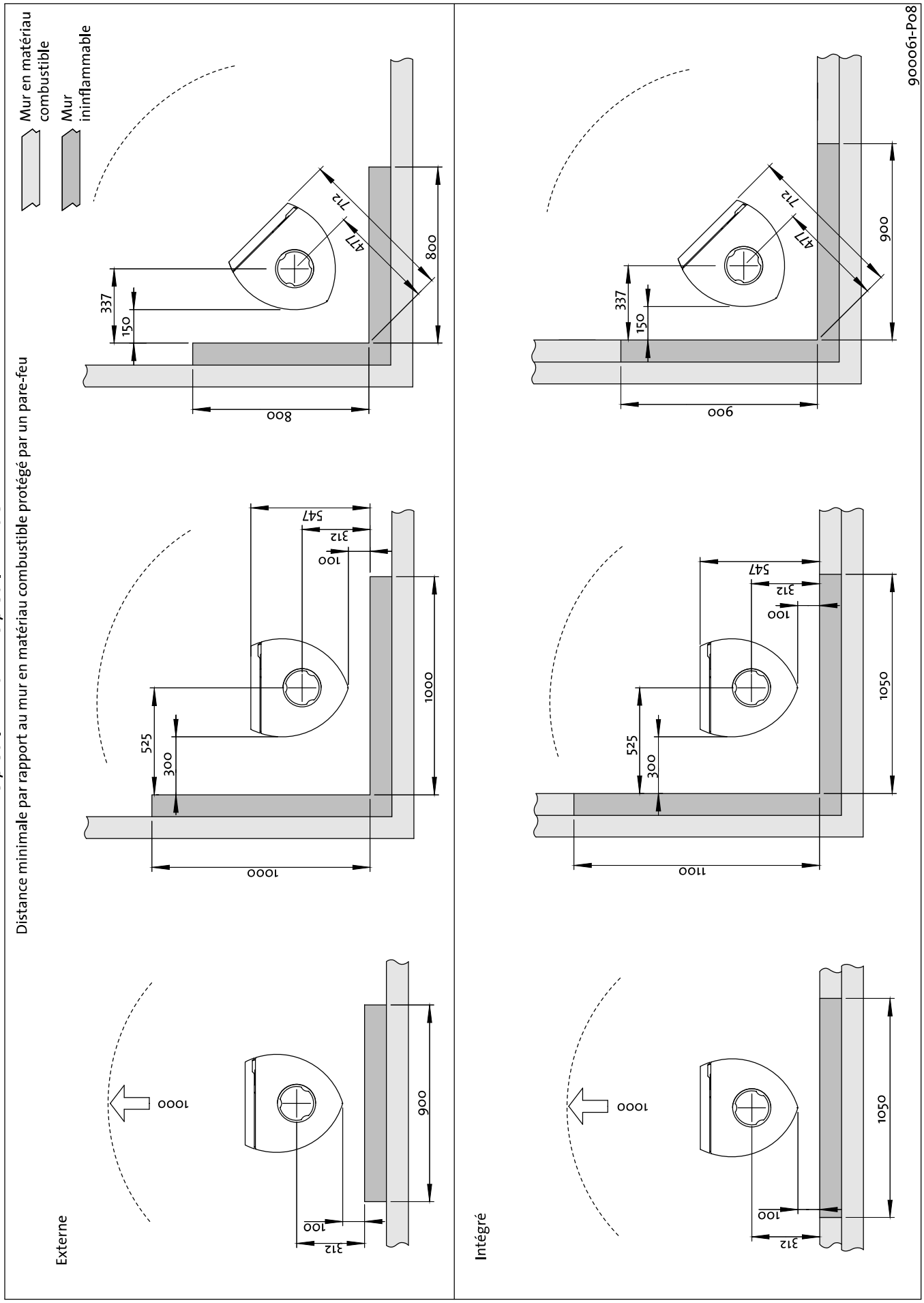

Fig. 1c

Jøtul F 162 C / Jøtul F 163 C

Distance minimale par rapport au mur en matériau combustible protégé par un pare-feu

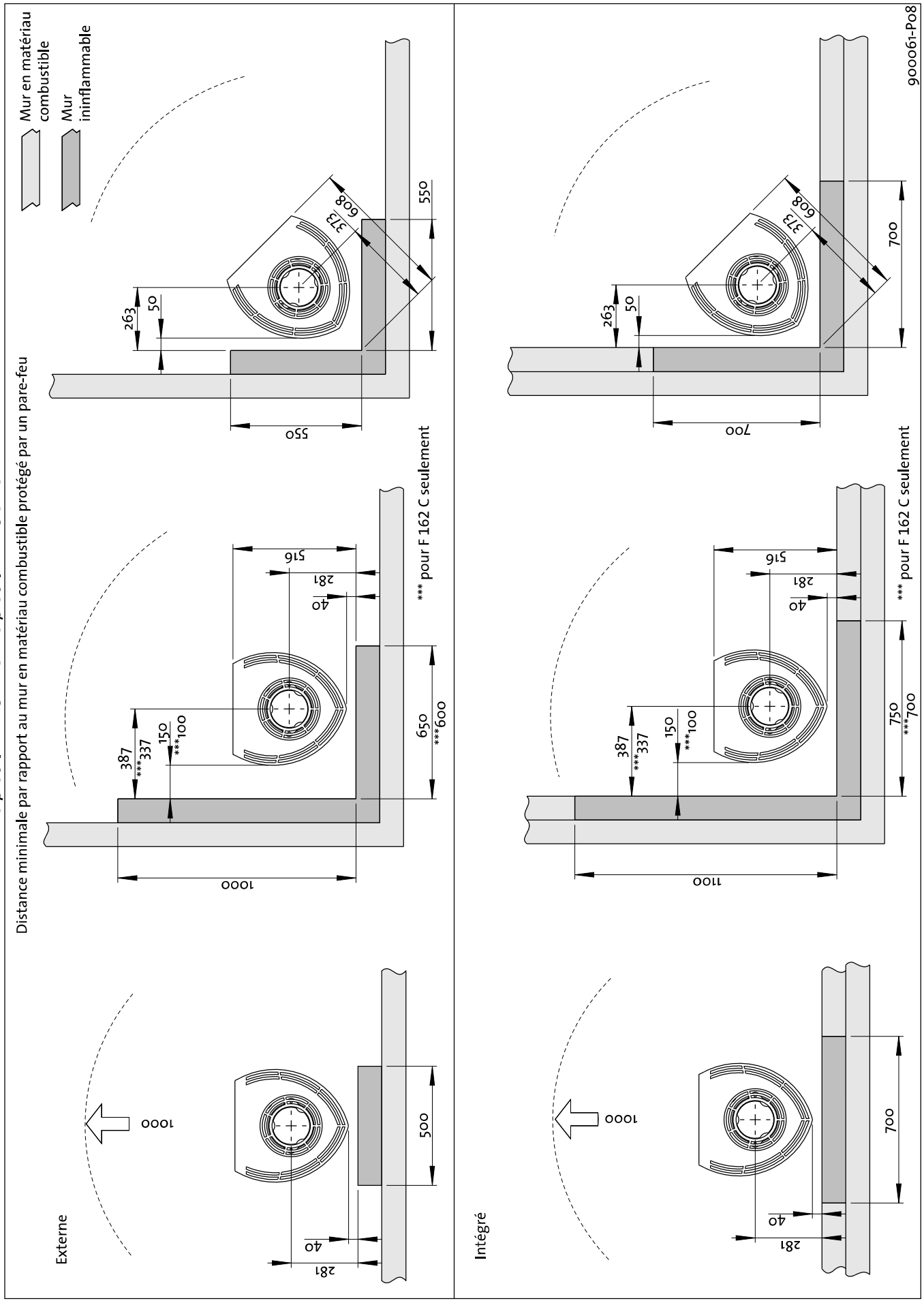

Arrivée d'air

L'arrivée d'air frais peut être raccordée directement au poêle Jøtul F 162 / Jøtul F 162 C / Jøtul F 163 / Jøtul F 163 C par :

- Un tuyau flexible depuis l'extérieur ou la cheminée (seulement si celle-ci dispose d'une conduite propre pour l'air frais) et vers le raccord d'air frais de l'appareil.

Fig. 2a, par un mur
Important ! Veuillez toujours frapper depuis l'intérieur du pied. Portez des lunettes de sécurité contre les éclats de fonte.

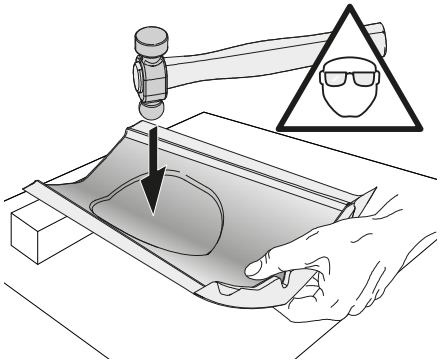

Astuce : il est préférable de démonter le pied arrière pour ouvrir le passage de gaine.

1. Coucher le poele sur un côté. vous pouvez le protéger avec le carton d'emballage.
2. Démonter le pied arrière.
3. Utiliser un marteau lourd et tapez fort au centre de la prédécoupe.

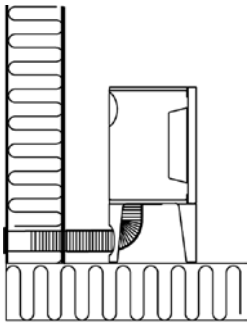

Fig. 2b, par le sol et la plaque de sol

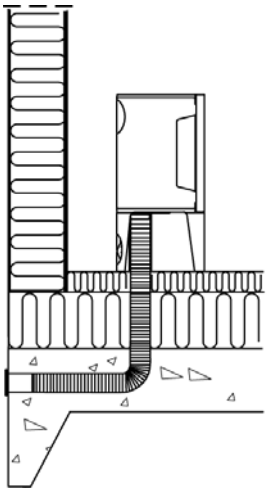

Fig. 2c, par le sol et la cave

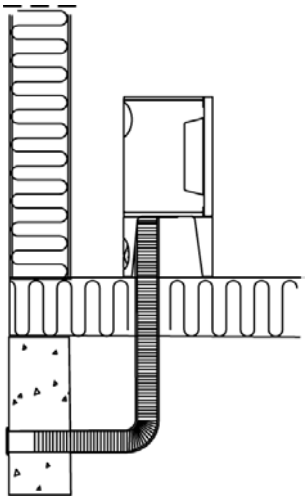

Fig. 2d, indirectement par un mur

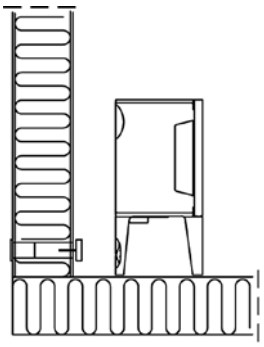

3.0 Sécurité

Remarque : Afin d'assurer un niveau de rendement et de sécurité optimal, l'installation d'un poêle Jøtul doit être confiée à un installateur qualifié.

Toute modification de l'appareil par le distributeur, l'installateur ou l'utilisateur final, risque de compromettre le bon fonctionnement de l'appareil et de ses éléments de sécurité. Ceci s'applique également à l'installation d'accessoires ou d'équipements en option qui ne sont pas fournis par Jøtul. Ce risque peut par ailleurs survenir dans le cas où des pièces ou éléments essentiels pour le bon fonctionnement et la sécurité du poêle, ont été désassemblés ou retirés.

Dans tous ces cas, le fabricant ne pourra être tenu responsable pour le produit et le droit de recours à la garantie sera rendu nul et sans effet.

3.1 Mesures de prévention anti-incendie

Toute utilisation du poêle comporte un certain degré de risque. C'est pourquoi, il est indispensable de toujours respecter les consignes de sécurité suivantes :

- Les distances minimales à respecter en utilisant le poêle ressortent de **la figure 1**.
- Assurez-vous que les meubles et autres matériaux inflammables ne sont pas trop rapprochés du poêle. Pas de matériaux inflammables dans un rayon de 1 mètre du poêle.
- Laissez le feu s'éteindre de lui-même. Ne tentez jamais d'éteindre le feu avec de l'eau.
- Le poêle devient chaud lorsqu'il est allumé et peut provoquer des brûlures à la personne qui le touche.

- Attendez que le poêle soit froid pour retirer les cendres. Les cendres pouvant encore contenir des braises, il convient de les recueillir dans un réceptacle ininflammable.
- Il convient d'épandre les cendres à l'extérieur ou de les vider dans un endroit ne présentant aucun risque d'incendie.

En cas de feu de cheminée:

- Fermer l'ensemble des trappes et des entrées d'air.
- Maintenir la porte de la chambre de combustion fermée.
- Vérifier toute présence de fumée dans le grenier et dans la cave.
- Contacter le service de sécurité incendie.
- Suite à un feu de cheminée, le foyer et la cheminée doivent être contrôlés par un spécialiste avant toute nouvelle utilisation afin de s'assurer que l'installation est opérationnelle.

4.0 Installation

N.B. Avant de procéder à l'installation, vérifiez que la cheminée est intacte.
Le produit est lourd ! Veillez à obtenir de l'aide avant de le redresser et de l'installer.

4.1 Le sol

Socle

Assurez-vous que le sol puisse supporter la cheminée. Voir la section **« 2.0 Données techniques »** consacrée aux poids spécifiques. Il est recommandé d'enlever le revêtement de sol pendant l'installation si celui-ci n'est pas solidaire du socle (parquet flottant).

Protection d'un sol inflammable

En cas de montage de la cheminée sur un sol combustible, recouvrez la partie du dessous et du devant de la cheminée d'une plaque de métal ou de tout autre matériau inflammable. L'épaisseur minimum recommandée est de 0,9 mm.
Les éventuels revêtements de sol inflammables, tels que linoléum, moquette, etc., devront être retirés de la surface couverte par la plaque de sol.

La plaque de sol doit être conforme aux législations et réglementations nationales.

En raison des différences locales entre les prescriptions en vigueur, nous vous conseillons de prendre contact avec les autorités locales compétentes.

4.2 Les murs (fig. 1a)

Distance par rapport à un matériau inflammable

La cheminée peut être utilisée avec un conduit de fumée non isolé, à condition que les distances entre le poêle et les murs/cloisons inflammables soient conformes à **la fig. 1**.
Distance par rapport à un mur avec conduit de cheminée non isolé : Voir **fig. 1**.

Distance par rapport aux murs protégés par un pare-feu (fig. 1b et fig. 1c)

En raison des différences locales entre les prescriptions en vigueur, nous vous conseillons de prendre contact avec les autorités locales compétentes.

Exigences relatives à la cheminée

La cheminée doit avoir une épaisseur minimale de **100 mm** et se composer de briques, de blocs de béton ou de béton léger. Des constructions et des matériaux différents peuvent aussi être utilisés s'ils présentent un dossier d'application satisfaisant.

Distance par rapport aux murs ininflammables

Par mur ininflammable on entend un mur massif non porteur en brique ou en béton.

En raison des différences locales entre les prescriptions en vigueur, nous vous conseillons de prendre contact avec les autorités locales compétentes.

4.3 Cheminées et conduits d'évacuation

- L'appareil peut être raccordé à une cheminée et à un conduit approuvés pour les poeles à combustible solide, avec les températures de fumées spécifiées dans la section **« 2.0 Données techniques »**.
- La section transversale minimale de la cheminée doit correspondre au moins à celle du conduit. Voir **«2.0 Données techniques»** lors du calcul de la section de cheminée appropriée.
- Plusieurs appareils à combustible solide peuvent être raccordés au même système de cheminée, dès l'instant où la section est suffisante.
- Le raccordement à la cheminée doit être effectué conformément aux instructions d'installation du fournisseur de la cheminée.
- Procédez à un montage d'essai avant de percer un trou dans la cheminée, afin d'assurer un montage correct. Voir la fig. 1 pour les dimensions minimales.
- Raccordement à l'arrière : assurez-vous que le conduit d'évacuation est bien incliné légèrement vers le haut à partir du poêle.
- Utilisez un coude de conduit doté d'une trappe afin de permettre les opérations de ramonage, suivant les pays.

Veillez impérativement à ce que les raccordements présentent un certain degré de flexibilité afin de prévenir des mouvements pouvant provoquer des fissures dans l'installation.

N.B. Un raccordement correct et étanche est essentiel pour assurer le bon fonctionnement de l'appareil.

Tirage recommandé; Voir «2.0 Données techniques». En cas de tirage trop important, installer et utiliser un réducteur de tirage.

4.4 Montage avant l'installation

Le produit est fourni en un seul colis.
- Une fois le poêle déballé, assurez-vous qu'il ne présente aucun dommage et que les poignées de commande fonctionnent.

4.5 Dépose du mécanisme de fermeture automatique sur la porte

Le produit est livré avec le mécanisme de fermeture automatique de porte pré-installé. Il pourra être retiré le cas échéant.

Fig. 3

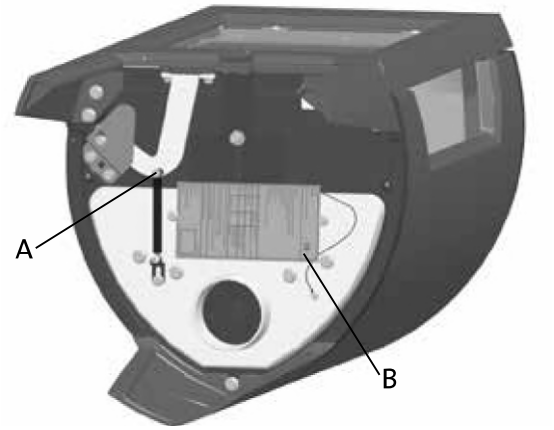

1. Déposez la vis et l'écrou **(Fig. 3 A)**.
2. Décrochez et retirez le ressort.

4.6 Sortie de fumées à l'arrière

L'appareil est livré avec la buse pour un raccordement dessus.
N.B. Procéder comme suit pour le raccordement arrière :

Fig. 4

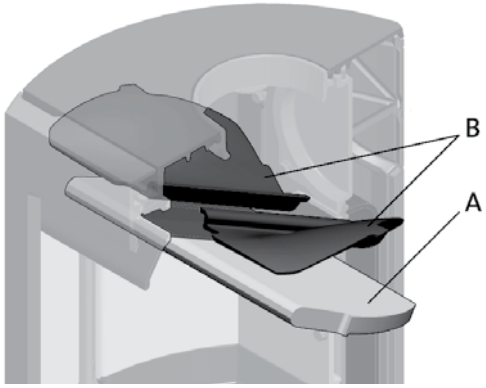

1. Soulevez délicatement la chicane **(fig. 4 A).**
2. Déposez l'une des plaques de doublage latérales en la soulevant légèrement pour la dégager. (Si vous utilisez des outils, n'oubliez pas qu'une manipulation brutale peut endommager les plaques de vermiculite).
3. Retirez le déflecteur.
4. Retirez l'autre plaque de doublage latérale.
5. Retirez les déflecteurs supérieurs **(fig. 4 B)**.

Fig. 5

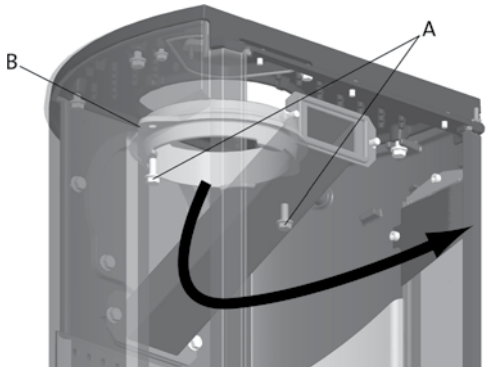

6. Dévisser les vis **(fig.5 A)** et retirer la buse **(fig. 5B)** par l'intérieur de la chambre de combustion.

Fig. 6a

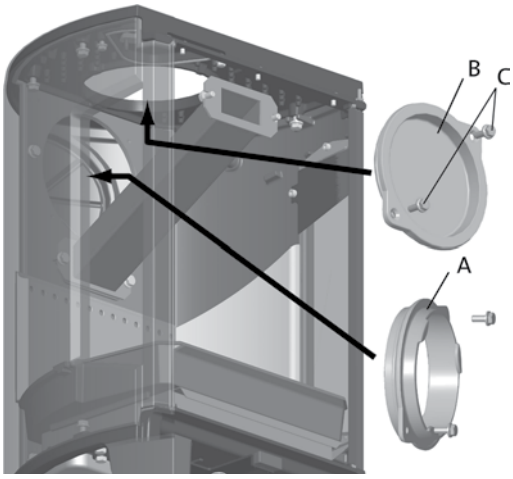

7. Desserrer les vis **(fig. 6a C)** et retirer la cache sortie de fumées **(fig. 6a B)** de l'arrière par l'intérieur de la chambre de combustion.

Fig. 6b

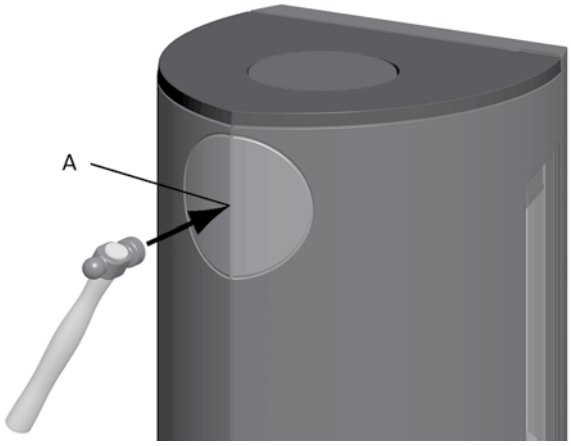

8. Cassez les cache passage de tuyau **(fig 6b A)**.
9. Fixer la buse par l'intérieur à la place du cache sortie de fumées.
10. Remettre en place les déflecteurs hauts **(fig. 4 B)** et bas **(fig. 4 A).**

4.7 Contrôle des fonctions

Une fois le poêle installé, vérifiez toujours les commandes. Elles doivent pouvoir être actionnées facilement et fonctionner correctement.

Les modèles Jøtul F 162, F 162 C, F 163 et F 163 C sont équipés des commandes suivantes:

Commande d'entrée d'air inférieure (allumage)/supérieure

Allumage

Fig. 7a

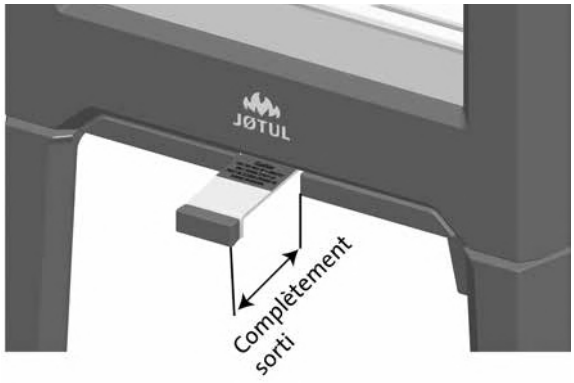

- Ouvrir le registre d'air frais et le registre d'allumage en tirant le poignée à fond. (Portez un gant ou une protection similaire pour vous protéger la main si les poignées sont brûlantes.)

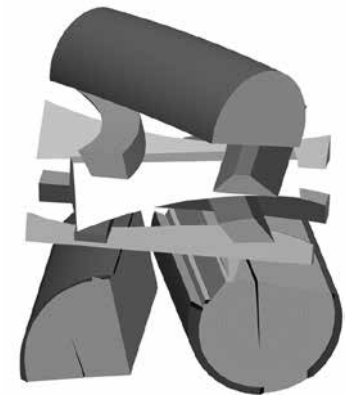

- Disposez deux bûches au fond du poêle et empilez le bois d'allumage en strates successives.
- Pour finir, placez une bûche de taille moyenne au sommet de la pile de bois.
- Placez 2 ou 3 briquettes sous la plus haute strate de bois d'allumage puis allumez le feu.

Chauffage

Fig. 7b

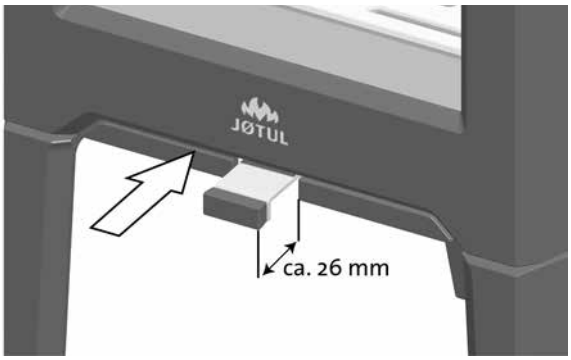

- Une fois que le feu a bien pris, fermez le registre d'arrivée d'air **(fig. 7 B)** sur environ 26 mm.
- Lors du premier allumage, laissez la porte ouverte jusqu'à ce que la façade soit bien chaude pour éviter que les joints ne collent à la peinture.
- Fermez la porte.
- Vous pouvez régler la vitesse de combustion pour obtenir le degré de chauffage souhaité en ajustant le registre d'air frais.
- Vérifiez que la postcombustion (combustion secondaire) démarre. On le voit aux flammes jaunes, dansantes, devant les trous sous le déflecteur.
- Conseil pratique : Pour ne pas risquer d'oublier de fermer l'entrée d'air inférieure **(fig. 7 B)** ce qui pourrait être dommageable pour l'appareil), privilégiez la porte ouverte pour allumer ou relancer le feu.

Ajouter du bois

Alimentez le poêle régulièrement mais n'ajoutez que de petites quantités de combustible à la fois. Si la combustion est trop vive, la contrainte thermique dans la cheminée risque de devenir excessive. Faites preuve de modération. Évitez les feux couvants car ils sont les plus polluants. Le feu est parfait lorsque le bois brûle bien et que la fumée qui sort de la cheminée est pratiquement invisible.

4.8 Risque de surchauffe

Ne surchauffez jamais le poêle

La surchauffe est provoquée par un excès de combustible et/ou d'air qui donne lieu à un dégagement de chaleur trop important. Lorsque le poêle devient incandescent par endroits, c'est un signe incontestable de surchauffe. Si le cas se produit, réduisez immédiatement l'apport d'air frais. En cas de surchauffe, la garantie ne pourrait pas être assurée.

Si vous pensez que la cheminée tire mal (tirage excessif ou insuffisant), contactez un spécialiste. Pour plus de détails, reportez-vous à **«4.0 Installation » (Cheminée et conduit d'évacuation)**.

5.0 Utilisation au quotidien

Odeurs perceptibles lors de la première utilisation du poêle

Lors de la première utilisation, le poêle peut émettre un gaz irritant et dégager des odeurs désagréables. Ceci se produit lorsque la peinture sèche. Ce gaz n'est pas toxique, mais il est recommandé de bien aérer la pièce. Maintenir une température élevé dans le poêle jusqu'à qu'aucun gaz, fumée ou odeur ne puisse être détecté.

5.1 Utilisation

Conseils de chauffage

Remarque : Il est recommandé d'entrer les bûches qui ont été stockées à l'extérieur ou dans une pièce froide 24 heures avant de les brûler afin de les amener à température ambiante.

Il existe différentes manières de chauffer le poêle, mais soyez toujours attentif à ce que vous y mettez. Voir le chapitre intitulé **« La qualité du bois »**.

La qualité du bois

Par bois de qualité, nous entendons les essences les plus courantes telles que bouleau, épicéa et pin ou hêtre, chêne, érable. Suivant les pays.

Les bûches doivent sécher afin que leur teneur en eau ne dépasse pas 20 %.
Pour cela, il convient de couper le bois à la fin de l'hiver. Fendez-les et empilez-les pour permettre à l'air de bien circuler. Recouvrez les piles afin de protéger les bûches de la pluie. Entrez les bûches dans la maison au début de l'automne en vue de leur utilisation pendant l'hiver qui suit.

Soyez particulièrement attentif à ne jamais brûler les matériaux suivants dans le poêle :
- Les déchets ménagers, les sacs en plastique, etc.
- Le bois peint ou imprégné (très toxique).
- Le bois contreplaqué
- Le bois qui est resté dans l'eau
- Les chutes de menuiserie dont le bois est trop sec.
- Le bois de récupération de chantier

Ceux-ci risquent d'endommager l'appareil et ce sont aussi des polluants.

Remarque : N'employez jamais de l'essence, de la paraffine, de l'alcool (méthylique) ou tout liquide similaire pour allumer le feu. Vous risqueriez de vous blesser sérieusement et d'endommager l'appareil.

Consommation de bois

Utilisation de bois avec puissance thermique nominale: Env. 1,6 kg/h. L'efficacité de la combustion du bois dépend par ailleurs d'une longueur correcte des bûches utilisées. **La dimension des bûches devrait être de :**

Utilisation quotidienne

Pour le bois d'allumage :
Longueur : 23 - 33 cm
Diamètre : 2 - 5 cm
Quantité par flambée : 6 – 8 bûches
Pour le bois de chauffage (fendu) :
Longueur : 23 - 33 cm
Diamètre : Env. 8 cm
Fréquence de remplissage : Environ toutes les 45 minutes
Taille du foyer : 1,2 kg
Quantité par remplissage : 2 bûches

La puissance thermique nominale est atteinte avec une ouverture du clapet de tirage de 57 %.

Utilisation maximum

Chargement maximum : 2,9 kg/h (maximum 3 bûches / 2,2 kg par chargement).

5.2 Décendrage

Les modèles Jøtul F 162 / F 162 C / F 163 / F 163 C sont équipés d'un cendrier qui facilite l'élimination des cendres.

Fig. 8

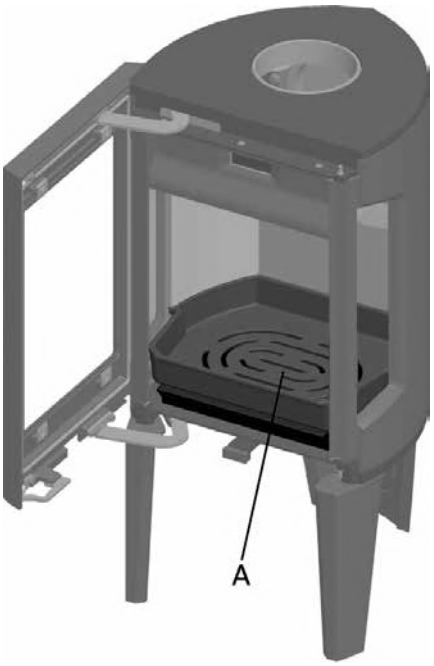

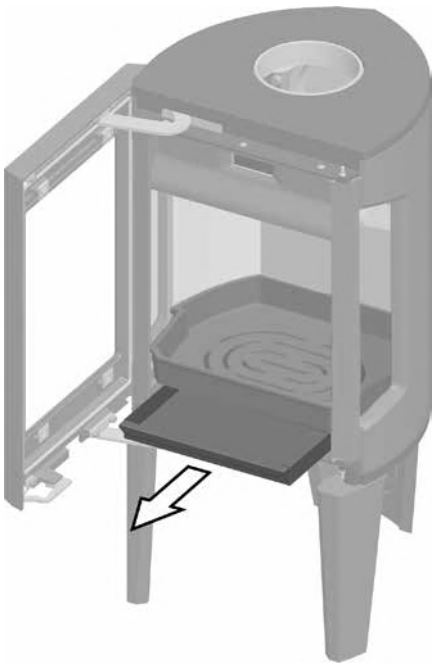

1. Raclez les cendres au-dessus de la grille **(fig. 8 A)** de la sole foyère pour qu'elles tombent dans le cendrier. Utilisez un gant pour saisir la poignée du cendrier.
2. Assurez-vous que le remplissage du cendrier ne va pas jusqu'à empêcher la descente des cendres à travers la grille.

Conseil pratique : Afin de protéger la sole foyère du poêle des braises extrêmement chaudes, laisser quelques centimètres de cendres au fond en permanence et videz les excès de cendres avec une pelle métallique par la porte.

6.0 Entretien

Avertissement : Toute modification du produit sans autorisation est interdite.
N'utilisez que des pièces de rechange d'origine.

6.1 Changement des plaques de doublage/sole foyère

AVERTISSEMENT ! Les plaques de doublage et le déflecteur inférieur sont en vermiculite. C'est un matériau très efficace mais fragile. Ne le choquez pas, ne le rayez pas, introduisez les bûches délicatement lorsqu'il n'y a plus de flammes et de longueur ne dépassant pas 33 cm.

Fig.9

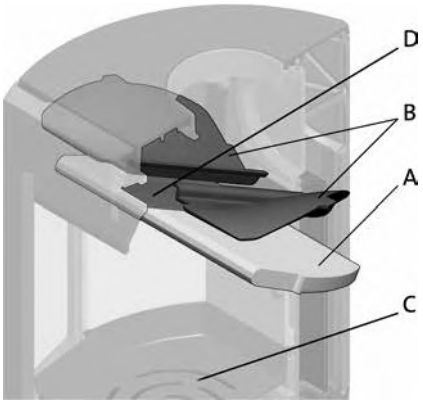

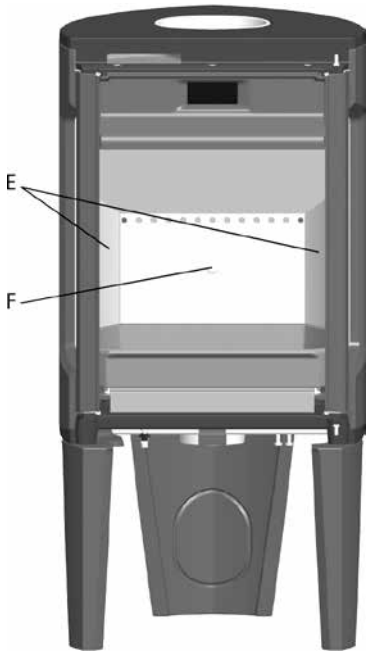

1. Soulevez délicatement la chicane **(fig. 9 A).**
2. Retirez l'une des plaques de doublage latérales **(fig. 9 E)** en les soulevant légèrement pour la dégager. (Si vous utilisez des outils, n'oubliez pas qu'une manipulation brutale peut endommager les plaques de vermiculite).
3. Retirez le déflecteur.
4. Retirez l'autre plaque de doublage latérale.
5. Dévissez les vis M8x25 mm de la plaque de doublage arrière **(fig. 9 F)** et retirez-la.
6. Puis retirez la sole foyère en la soulevant **(fig. 9 C)**.

Pour l'installation, suivez la même procédure mais dans l'ordre inverse.

6.2 Changement du déflecteur

- Suivez les étapes 1 à 3 sous **fig. 9**.
- Il est ainsi plus facile d'accéder aux déflecteurs de fumée **(fig. 9 B)** si ces derniers doivent être déposés. Ils reposent sur un appui sur la plaque de doublage latérale et un sur le distributeur d'air **(fig. 9 D).**
- Abaissez les déflecteurs et retirez-les par la porte.

Pour la réinstallation, suivez la même procédure dans l'ordre inverse.

7.0 Maintenance

7.1 Nettoyage et élimination de la suie

Pendant l'utilisation, de la suie peut se déposer sur les surfaces internes du poêle. La suie est un bon isolant. Elle réduit donc le rendement thermique du poêle. Utiliser une brosse métallique pour retirer tout dépôt de suie dans le produit sauf sur les plaques en vermiculite.

Laisser brûler vivement afin d'éviter tout dépôt de goudron et d'eau dans le poêle. Un nettoyage annuel de l'intérieur du poêle est requis pour optimiser le rendement du produit. Cette opération peut être réalisée lors du ramonage des conduits et de la cheminée.

7.2 Ramonage des conduits d'évacuation vers la cheminée

Le ramonage des conduits doit s'effectuer à partir de la trappe de ramonage ou depuis l'intérieur du produit., suivant les pays, interdit en France.
Pour cela, un des déflecteurs doit être retiré.

7.3 Inspection du poêle

Jøtul recommande que l'utilisateur contrôle personnellement et soigneusement le poêle suite à une opération de ramonage/nettoyage. Vérifier l'absence de fissures sur toutes les surfaces visibles. Vérifier également l'état et la bonne installation de tous les joints. Tout joint montrant des signes d'usure, de déformation ou de dureté doit être remplacé. Un appareil ne doit jamais fonctionner avec un composant défaillant.

Nettoyer soigneusement les gorges de joint, appliquer de la colle céramique (disponible auprès des distributeurs Jøtul), puis insérer correctement le joint sans tirer dessus. La colle sèche rapidement.

7.4 Entretien de la surface externe

La couleur des produits peints peut se ternir après plusieurs années d'utilisation. Avant d'appliquer une nouvelle couche de peinture, brosser et laver la surface peinte pour en éliminer toutes les particules.

8.0 Équipements en option

8.1 Cache-pied : raccordement prise d'air extérieur

Réf. 51012329

8.2 Dessus en pierre ollaire : 50 mm, complet

Remarque: Pas pour Jøtul F 162 C / Jøtul F 163 C.
Réf. 51012327

9.0 Garantie

La société Jøtul offre une garantie sur les pièces extérieures en fonte en cas de vice de matière et/ou de fabrication à compter de la date de l'achat / de l'installation du poêle. L'acheteur est en droit de retourner la marchandise à condition que le poêle ait été installé en conformité avec les lois et règlements en vigueur ainsi qu'avec les instructions d'installation et d'utilisation de Jøtul.

La garantie ne couvre pas :

L'installation d'options, notamment pour rectifier le tirage, l'arrivée d'air ou d'autres circonstances qui échappent au contrôle de Jøtul. La garantie ne couvre pas les consommables tels que les plaques de doublage, les déflecteurs de fumée, les grilles de poêle, les grilles de fond, les briques réfractaires, les amortisseurs, les vitres et les joints car ces éléments nécessitent d'être remplacés régulièrement en usage normal. La garantie ne couvre pas les dommages causés par l'utilisation d'un combustible inapproprié pour allumer le feu, tel que du bois ayant séjourné dans l'eau, du bois imprégné, du bois peint, des résidus de coupe, de l'aggloméré, des chutes de menuiserie, etc. La surchauffe se produit facilement en cas d'utilisation d'un combustible inapproprié. Le poêle devient alors incandescent, ce qui provoque le ternissement de la peinture et la fissuration des pièces en fonte.

La garantie ne couvre pas les avaries causées lors du transport de l'appareil entre le distributeur et le lieu de livraison. La garantie ne s'applique pas non plus aux dommages causés par l'utilisation de pièces qui ne sont pas d'origine.

Índice

Manual de instalación con información técnica

1.0 Relación con las autoridades 26

2.0 Datos técnicos 26

3.0 Seguridad 30

4.0 Instalación 31

5.0 Uso diario.....34

6.0 Servicio 35

7.0 Mantenimiento 36

8.0 Equipo opcional 36

9.0 Garantía..... 36

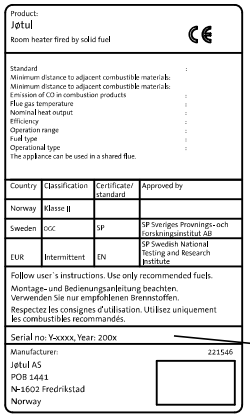

Todos nuestros productos presentan una etiqueta que indica el año y el número de serie. Anote este número en el lugar que se indica en las instrucciones de instalación.

Mencione siempre el número de serie al ponerse en contacto con Jøtul o con su distribuidor.

Serial no.

1.0 Relación con las autoridades

La instalación de una estufa debe realizarse de acuerdo con los códigos y normativas locales de cada país.

En la instalación de los productos deben cumplirse todas las disposiciones locales, incluidas aquellas referentes a las normas nacionales y europeas.

Antes de la instalación, lea atentamente el manual de Instrucciones para instalación. Antes de utilizar el producto, la instalación debe ser revisada por un técnico cualificado.

Una placa de identificación del material resistente al calor está fijada en el producto **(fig. 3 B)**. La placa contiene información de identificación y documentación del producto.

2.0 Datos técnicos

	Jøtul F 162 **Jøtul F 162 C**	**Jøtul F 163** **Jøtul F 163 C**
Material:	Hierro fundido	Hierro fundido
Acabado:	Pintura	Pintura/esmalte
Combustible:	Madera	Madera
Longitud máx. de los troncos:	33 cm	33 cm
Salida de humos:	Superior/trasera	Superior/trasera
Tamaño del tubo de tiro:	Ø150 mm, 177 cm² de sección	Ø150 mm, 177 cm² de sección
Peso F 162 y F 163:	115 kg	115 kg
Peso F 162 C y F 163 C:	134 kg	134 kg
Equipo opcional:	cubierta para la pata trasera, cubierta superior de saponita – completa (no para la F 162 C / F 163 C)	cubierta para la pata trasera, cubierta superior de saponita – completa (no para la F 162 C / F 163 C)
Dimensiones, distancias:	Consulte la **fig. 1**	Consulte la **fig. 1**

Datos técnicos según EN 13240 :

	Jøtul F 162 **Jøtul F 162 C**	**Jøtul F 163** **Jøtul F 163 C**
Potencia calorífica nominal:	5 kW	5 kW
Flujo másico del gas de tiro:	5,0 g/s	5,0 g/s
Tiro de chimenea recomendado:	12 Pa	12 Pa
Eficiencia:	83 % a 5,9 kW	82 % a 5,9 kW
Emisión de CO (13 % O_2):	0,06 %	0,10 %
CO emission (13 % O_2):	792 mg/Nm^3	1242 mg/Nm^3
Temperatura de gases:	260 °C	260 °C
Tipo de funcionamiento:	Intermitente	Intermitente

Aquí, la combustión intermitente supone un uso normal de la estufa. Se prende una nueva cámara de combustión en cuanto el combustible se ha consumido hasta la cantidad de brasas apropiada.

Fig. 1a

Jøtul F 162 / Jøtul F 163 / Jøtul F 162 C / Jøtul F 163 C

Jøtul F 162 / Jøtul F 163

603
903
789
300
100

Orificios en la pared para aire externo Ø 100 mm conexión

Orificios en el piso para aire externo Ø 100 mm conexión

450
119
93
235
447

Jøtul F 162 C / Jøtul F 163 C

648
948
300

473
147
93
235
475

Pared de material combustible

Y
X

Dimensiones mínimas de la placa de piso X/Y = De conformidad con las leyes y reglamentos nacionales. Ver el capítulo 4.1

Distancia mínima a una pared inflamable, modelo básico:

Jøtul F 162 / F 163

1000
825
600
647
*592
412
*362
200
*150

687
*587
500
*400
972
*831
1207
*1066

* Con chimenea semiaislada/tubo de tiro con escudo térmico completamente bajado contra el producto.

Distancia mínima a una pared inflamable, modelo de convección:

Jøtul F 162 C / F 163 C

1000
537
***437
300
***200
575
**525
100
**50
340
**290

*** Sólo F 162 C

413
**363
200
**150
584
**513
819
**748

** Jøtul F 162 C / F 163 C con chimenea semiaislada/tubo de tiro con escudo térmico completamente bajado contra el producto.

900061-P08

ESPAÑOL

Fig. 1b

Jøtul F 162 / Jøtul F 163

Distancia mínima a una pared de material combustible protegida con cortafuegos

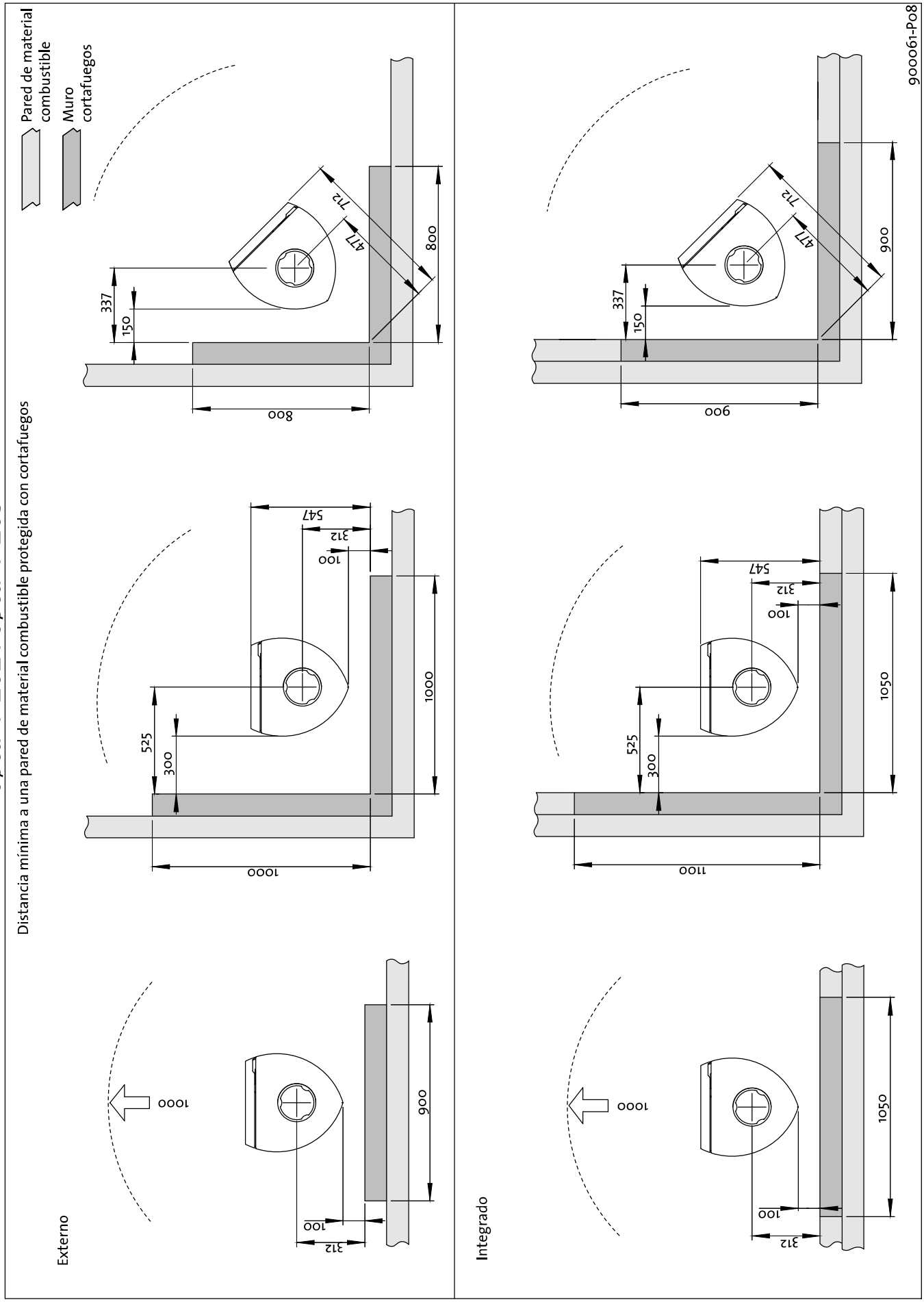

Fig. 1c

Jøtul F 162 C / Jøtul F 163 C

Distancia mínima a una pared de material combustible protegida con cortafuegos

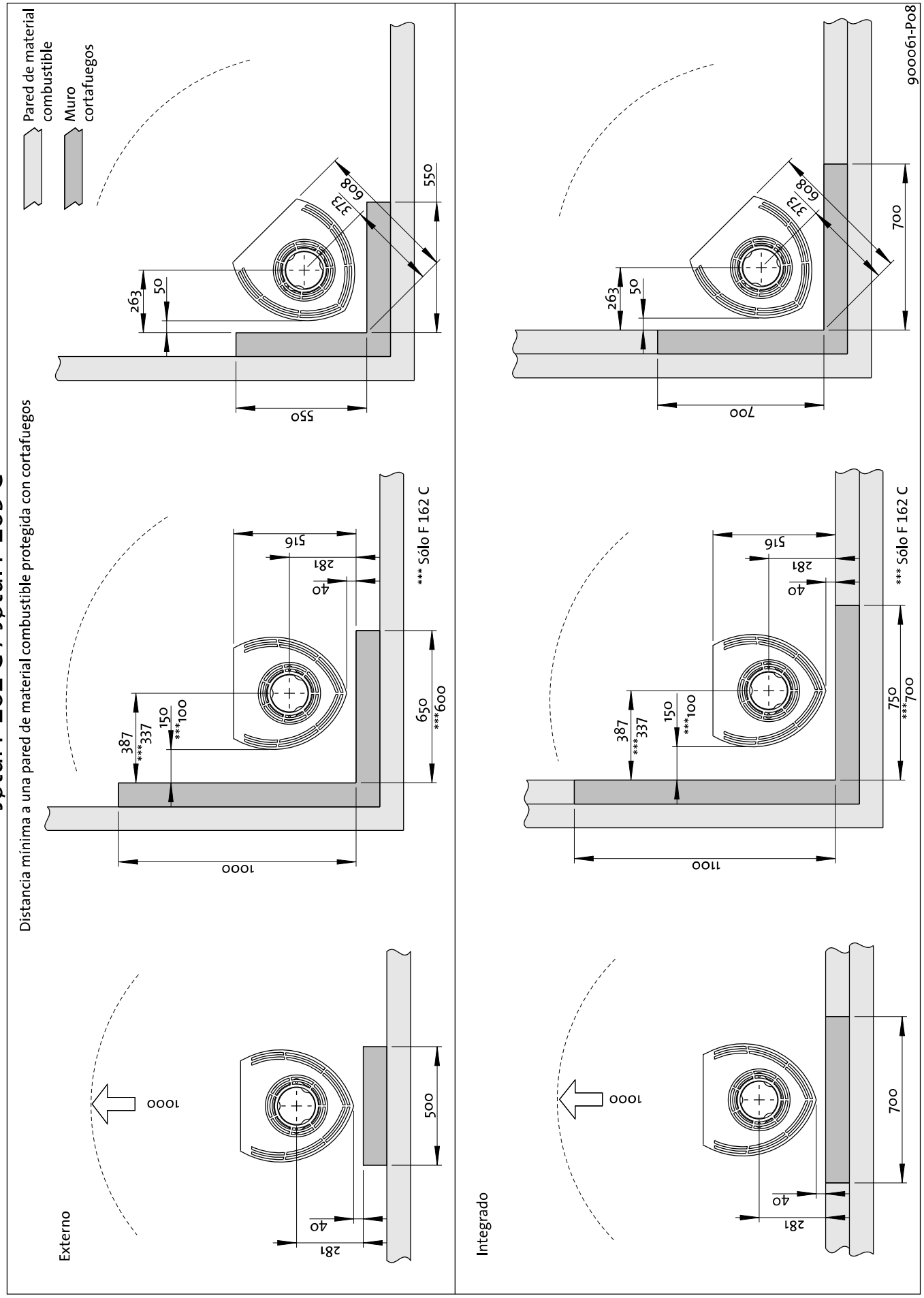

Suministro de aire

La conexión de aire exterior debe conectarse directamente a la Jøtul F 162 / Jøtul F 162 C / Jøtul F 163 / Jøtul F 163 C a través de:

- a través de un tubo flexible desde el exterior/chimenea (solo si la chimenea tiene su propio conducto para aire externo) y al conector de aire externo del producto.

Fig. 2a, a través de una pared exterior
¡Importante! El troquel para la conexión de aire exterior se debe romper desde el interior. Utilice gafas de seguridad.

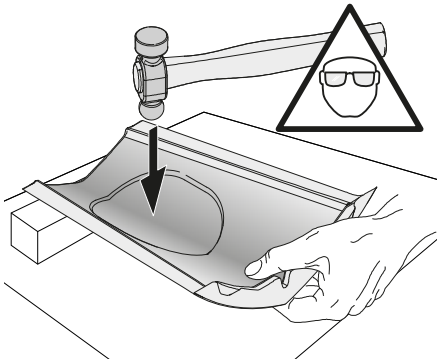

Truco: ganará en comodidad y seguridad desmontando la pata trasera antes de abrir el agujero.

1. Apoye el producto con cuidado lateralmente. Puede poner el embalaje de cartón en el suelo para protegerlo de arañazos.
2. Desmonte la pata trasera.
3. Utilice un mazo pesado y golpee con fuerza en medio del troquel para abrir el agujero.

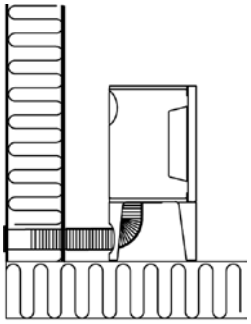

Fig. 2b, a través de la placa de piso y el suelo

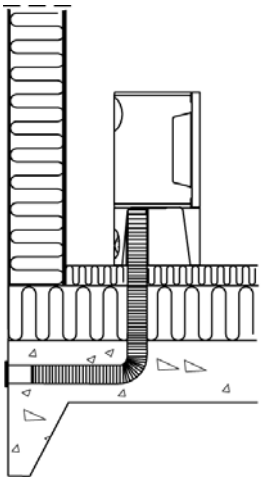

Fig. 2c, a través del suelo y el zócalo

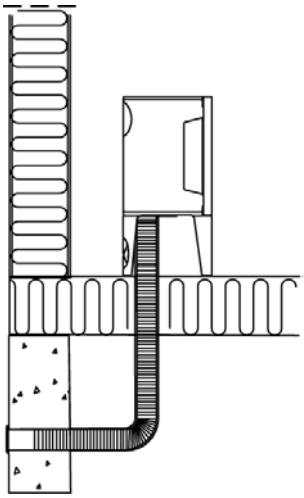

Fig. 2d, indirectamente a través de una pared exterior

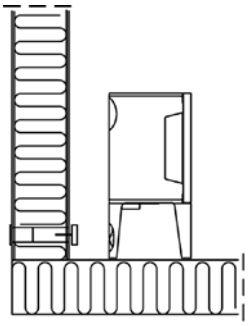

3.0 Seguridad

N. B.: para garantizar un rendimiento y seguridad óptimos, las estufas Jøtul deben ser instaladas por un instalador cualificado.

Cualquier modificación del producto por parte del distribuidor, instalador o usuario puede motivar que el producto y sus prestaciones de seguridad no funcionen del modo previsto. Esto también se aplica a la instalación de accesorios o extras opcionales suministrados por terceros. Lo mismo puede suceder si se desmontan o retiran componentes esenciales para el funcionamiento y la seguridad de la estufa.

En cualquier caso, el fabricante no se hará responsable del producto y el derecho a realizar una reclamación quedará anulado y sin validez.

3.1 Medidas de prevención de incendios

Existe un cierto elemento de riesgo cada vez que se usa la estufa. Por lo tanto, deben respetarse las siguientes instrucciones:

- Las distancias mínimas de seguridad al utilizar la estufa se muestran en la **fig. 1**.
- Asegúrese de que no haya muebles ni otros elementos inflamables demasiado cerca de la estufa. Los elementos inflamables no deberían estar a menos de 1000 mm de la estufa.
- Deje que el fuego se consuma por sí solo. Nunca apague las llamas con agua.
- La estufa se calienta cuando está encendida y puede causar quemaduras si se toca.

- Saque las cenizas solo con la estufa fría. Las cenizas pueden contener rescoldos calientes y, por lo tanto, deberán ponerse en un recipiente no inflamable.
- Las cenizas deberán sacarse al exterior o vaciarse en un lugar donde no supongan un riesgo de incendio.

Si se produce un incendio en la chimenea

- Cierre todas las trampillas y los respiraderos.
- Cierre la puerta de la estufa.
- Compruebe si hay humo en el sótano y en la buhardilla.
- Llame a los bomberos.
- Después de producirse un incendio, un experto deberá comprobar la estufa y la chimenea antes de utilizarse para asegurar que funciona correctamente.

4.0 Instalación

Nota: compruebe que la estufa no presente daños antes de comenzar su instalación.
¡El producto es pesado! Asegúrese de contar con ayuda para montar e instalar la estufa.

4.1 Suelo

Base

Compruebe que el suelo sea lo bastante sólido para la estufa. Compruebe el peso en **«2.0 Información técnica»**. Se recomienda retirar durante la instalación el piso que no esté fijado a la base (el llamado piso flotante).

Protección de suelos de material inflamable

Si la estufa va a montarse sobre un suelo de material inflamable, cubra el suelo debajo y delante de la estufa con una placa de metal u otro material no inflamable. El espesor mínimo recomendado es de 0,9 mm.
También hay que quitar cualquier revestimiento de material inflamable, como linóleo, alfombras, etc. de la zona que vaya a cubrir la plancha de suelo.

La plancha deberá cumplir las leyes y normativas nacionales.
Consulte a la autoridad local competente en materia de construcción sobre posibles restricciones y requisitos de instalación.

4.2 Paredes (fig. 1a)

Distancia hasta una pared de material inflamable

La estufa puede usarse con un tubo de tiro sin aislar siempre que las distancias hasta las paredes hechas de materiales inflamables sean como las mostradas en la **fig. 1**.
Distancia hasta la pared con tubo de tiro sin aislar: Ver **fig. 1.**

Distancia hasta paredes cubiertas por un cortafuegos (fig. 1b y fig. 1c)

Consulte a la autoridad local competente en materia de construcción sobre posibles restricciones y requisitos de instalación.

Requisitos del cortafuegos
El cortafuegos debe tener un grosor de al menos **100 mm** y estar hecho de ladrillo, bloques de hormigón u hormigón ligero. También podrán emplearse otros materiales y construcciones con documentación satisfactoria.

Distancia hasta paredes de material no inflamable

Por pared de material no inflamable nos referimos a un muro sin carga de hormigón/ladrillos.

Consulte a la autoridad local competente en materia de construcción sobre posibles restricciones y requisitos de instalación.

4.3 Chimeneas y tubos de tiro

- La estufa puede conectarse a una chimenea y tubo de tiro homologados para estufas de combustible sólido con temperaturas de tiro conforme a lo especificado en **«2.0 Información técnica»**.
- La sección de la chimenea debe ser al menos igual de grande que la sección del tubo de tiro. Consulte **«2.0 Información técnica»** para calcular la sección correcta de chimenea.
- Si la sección de la chimenea es suficiente, se pueden conectar varios dispositivos de combustible sólido a la misma chimenea.
- La conexión a la chimenea debe realizarse de acuerdo con las instrucciones de instalación del proveedor de la chimenea.
- Antes de practicar un orificio en la chimenea, debe instalarse provisionalmente la estufa para marcar correctamente la posición de la estufa y del orificio de la chimenea. Véase la **fig. 1** para determinar las dimensiones mínimas.
- Compruebe que el tubo de tiro esté inclinado a lo largo de la chimenea.
- Use un codo del tubo de tiro con una trampilla que permita su deshollinado.

Tenga en cuenta el hecho de que es especialmente importante que las conexiones tengan una cierta flexibilidad para evitar que el movimiento en la instalación produzca grietas.

Nota: es muy importante para el funcionamiento del producto disponer de una conexión correcta y sellada.

Corriente de chimenea: consulte «2.0 Información técnica». Si la corriente es demasiado fuerte, instale y opere un regulador del tiro al objeto de controlar la corriente.

4.4 Montaje antes de la instalación

El producto se entrega en un solo bulto.
Después de desembalar la estufa, compruebe que no presente ningún daño y que funcionen los mandos reguladores.

4.5 Desmontar el mecanismo de cierre automático de la puerta

El producto incluye un mecanismo de cierre automático de la puerta preinstalado, que puede desmontar si lo desea.

Fig. 3

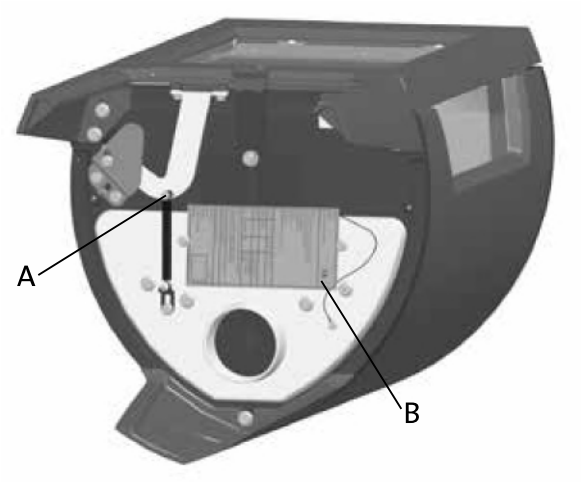

1. Quite el tornillo y la tuerca **(Fig. 3 A)**.
2. Suelte y retire el muelle.

4.6 Ajuste de la tubería de humos para salida posterior

El producto se suministra de fábrica con la salida de humos en configuración de salida superior.

Nota: Siga las instrucciones siguientes para instalaciones con salida posterior.

Fig. 4

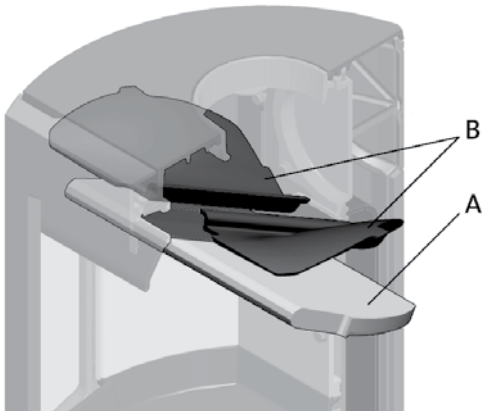

1. Levante con cuidado la placa deflectora **(fig. 4 A)**.
2. Quite una de las placas de combustión laterales levantándola un poco y sacándola. (Tenga en cuenta que si utiliza herramientas, las placas de vermiculita pueden sufrir daños por una manipulación descuidada).
3. Retire la placa deflectora.
4. Quite la otra placa de combustión lateral.
5. Retire los deflectores de escape **(fig. 4 B)**.

Fig. 5

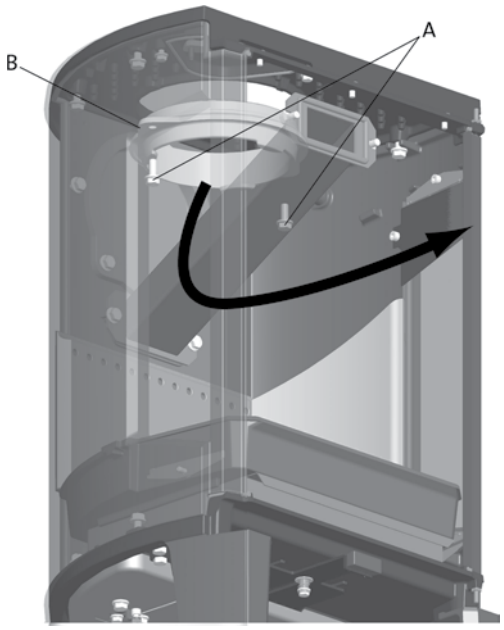

6. Desatornille los tornillos **(fig. 5 A)** y retire la salida de humos **(fig. 5 B)** de su posición superior en la cámara de combustión.

Fig. 6a

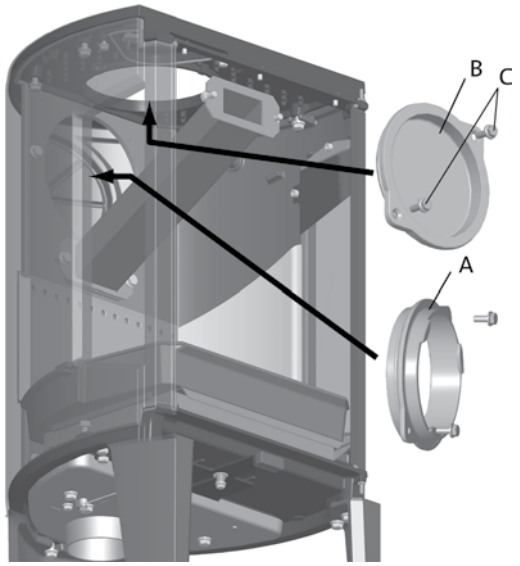

7. Desatornille los tornillos **(fig. 6a C)** y retire la tapa **(fig. 6a B)** de la salida posterior en la cámara de combustion.

Fig. 6b

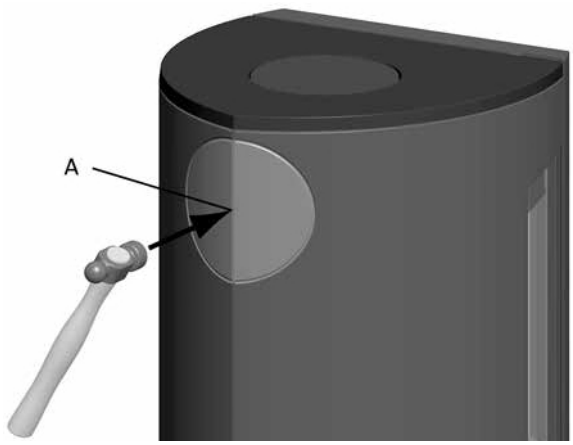

8. Rompa las tapas marcadas **(fig. 6b A)**.
9. Coloque la salida de humos **(fig. 6a A)** desde el interior de la cámara de combustión en el lugar donde estaba la tapa.
10. Instale la tapa **(fig. 6a B)** en el lugar donde estaba la salida de humos
11. Y por último vuelva a colocar los deflectores de humos **(fig. 4 B)** y la placa deflectora **(fig. 4 A)**.

4.7 Control de las funciones

Una vez instalado el producto, compruebe siempre las funciones de control. Deberán moverse fácilmente y funcionar correctamente.

Jøtul F 162, F 162 C, F 163 y F 163 C están equipadas con los siguientes controles:

Respiradero de aire/encendido

Encendido

Fig. 7a

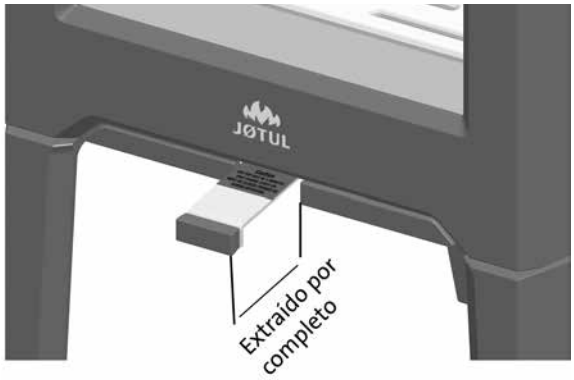

- Abra el respiradero de aire y el respiradero de encendido tirando de los manillares hasta el tope. (Use un guante o algo similar para protegerse la mano en caso de que los manillares estén calientes).

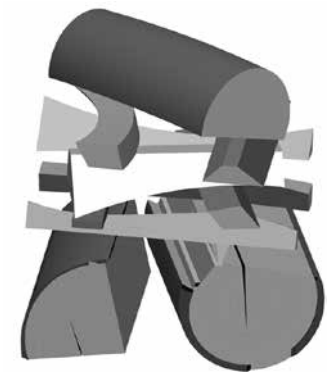

- Coloque dos troncos en la parte inferior de la cámara de combustión y apile las astillas para encender en capas.
- Por último, ponga un tronco de tamaño medio en la parte superior de la pila.
- Ponga 2 ó 3 briquetas o astillas para encender debajo de la capa superior de astillas y encienda el fuego.

Calefacción

Fig. 7b

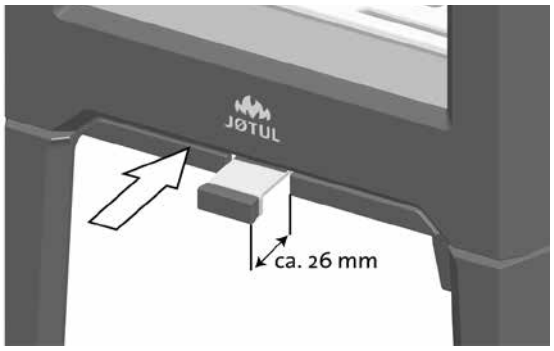

- Deslice el respiradero de aire/encendido **(fig. 7 B)** hasta extenderlo unos 26 mm cuando la leña haya encendido correctamente y arda bien.
- Cierre la puerta.
- Entonces podrá regular el régimen de combustión para obtener el calor que desee ajustando el respiradero.
- Compruebe que se inicia la postcombustión (combustión secundaria). Se indica mediante llamas amarillas que bailan delante de los agujeros debajo de la placa deflectora.
- Si el caudal de aire es normal, podrá cerrar la puerta y el fuego se mantendrá por sí mismo.

Añadir madera

Avive la estufa con frecuencia pero añada solo una pequeña cantidad de leña en cada ocasión. Si la estufa está demasiado llena, el calor generado podría causar una elevada tensión en la chimenea. Añada combustible al fuego con moderación. Evite el fuego sin llama, pues es el que produce más contaminación. El fuego irá mejor cuando arda bien y el fuego que salga por la chimenea sea casi invisible.

4.7 Peligro de sobrecalentamiento

La estufa no debe usarse nunca de manera que se sobrecaliente

Se produce sobrecalentamiento cuando hay demasiado combustible y/o demasiado aire y se produce demasiado calor. Un signo seguro de sobrecalentamiento es cuando partes de la estufa se ponen al rojo. Si sucede esto, reduzca de inmediato la abertura del respiradero.

Solicite la ayuda de un profesional si sospecha que la corriente de la chimenea no es correcta (demasiada corriente o demasiado poca).

5.0 Uso diario

Olores al usar la estufa por primera vez

Cuando se usa la estufa por primera vez, puede emitir un gas irritante que huela ligeramente. Esto ocurre debido a que se seca la pintura. El gas no es tóxico, pero la habitación deberá ventilarse completamente. Deje que el fuego arda con mucha corriente hasta que haya desaparecido todo rastro del gas y no sea posible detectar humo ni olores.

Consejos de calentamiento

Nota: Los troncos que se hayan almacenado en el exterior o en una habitación fría deberán meterse al interior 24 horas antes de usarlos para que alcancen la temperatura ambiente.

Hay varias formas de calentar la estufa, pero siempre es importante tener cuidado con lo que introduce en ella. Consulte la sección sobre “Calidad de la madera”.

Calidad de la madera

Por madera de calidad nos referimos a los tipos más conocidos de madera, como abedul, picea y pino.

Los troncos deben secarse de forma que su contenido en humedad no supere el 20 %.
Para esto, los troncos deben cortarse a finales del invierno. Deben partirse y apilarse de forma que se garantice una buena ventilación. Las pilas de madera deben estar cubiertas para proteger los troncos de la lluvia. Los troncos deben ponerse a cubierto a principios del otoño y apilarse para utilizarlos en el próximo invierno.

Tenga cuidado especialmente de no usar nunca los siguientes materiales como combustible en su estufa:
- Basura doméstica, bolsas de plástico, etc.
- Madera pintada o impregnada *(que es extremadamente tóxica*).
- Planchas de madera laminada.
- Restos de madera

Pueden dañar el producto y también son contaminantes.
Nota: Nunca use gasolina, parafina, alcohol desnaturalizado o líquidos similares para encender el fuego. Puede sufrir lesiones graves y ocasionar serios daños al producto.

Consumo de madera

Uso de madera con emisión calorífica nominal: aprox. **1,6 kg/h**. Otro factor importante para un consumo de combustible apropiado es que los troncos sean del tamaño correcto. El tamaño de los troncos deberá ser:

Inflamación:
Longitud: 23 - 33 cm
Diámetro: 2 - 5 cm
Número por fuego: 6 - 8 piezas

Utilización habitual

Leña (troncos partidos):
Longitud: 23 - 33 cm
Diámetro: 8 cm aprox.
Intervalo de adición de leña: aproximadamente cada 45 minutos
Tamaño del fuego: 1,2 kg
Cantidad por carga: 2 piezas

La emisión calorífica nominal se obtiene al abrir el respiradero cerca de un 57 %.

Utilización máxima carga

Máxima carga: 2,9 kg/h (máximo 3 leños / 2,2 Kg por carga).

5.2 Retirada de cenizas

Jøtul F 162 / F 162 C / F 163 / F 163 C tienen una bandeja de cenizas que permite retirar las cenizas con facilidad.

Fig. 8

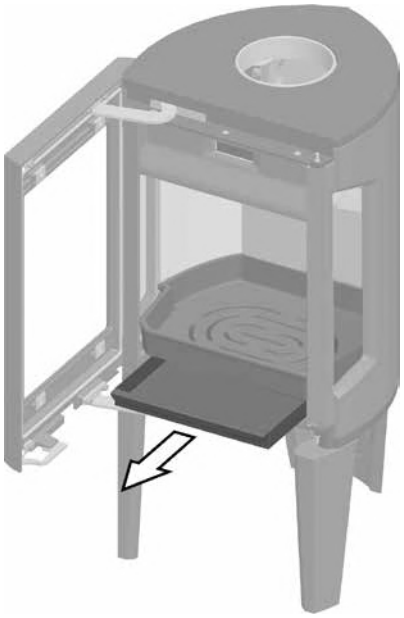

1. Empuje las cenizas a través de la rejilla **(fig. 8 A)** de la placa inferior y en la bandeja de cenizas. Use un guante para sujetar el asa de la bandeja de cenizas.
2. Compruebe que la bandeja de cenizas no se llene tanto que impida que la ceniza caiga en ella a través de la rejilla.

6.0 Servicio

¡Advertencia! Se prohíbe cualquier modificación no autorizada del producto.
Utilice piezas de repuesto originales únicamente.

6.1 Sustitución de las placas de combustión/placa inferior interna

Fig. 9

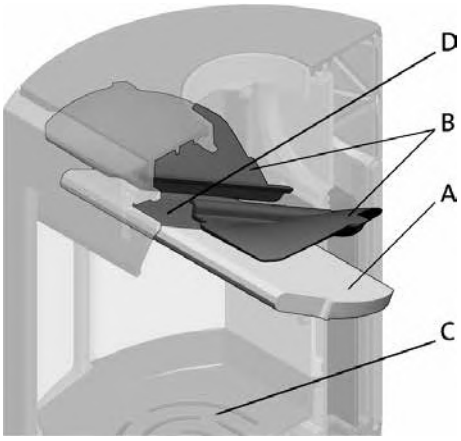

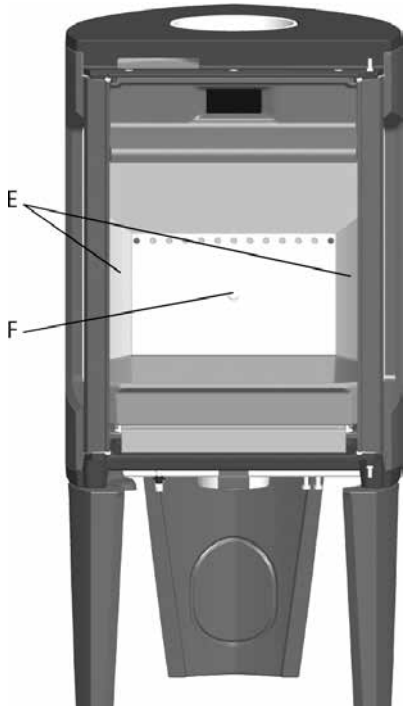

1. Levante con cuidado la placa deflectora **(fig. 9 A)**.
2. Quite una de las placas de combustión laterales **(fig. 9 E)** levantándola un poco y sacándola. (Tenga en cuenta que si utiliza herramientas, las placas de vermiculita pueden sufrir daños por una manipulación descuidada).
3. Retire la placa deflectora.
4. Quite la otra placa de combustión lateral.
5. Desatornille el tornillo M8x25 mm en la placa de combustión trasera **(fig. 9 F)** y retire la placa de combustión.
6. Después, levante y retire la placa inferior interna **(fig. 9 C)**.

Siga el mismo procedimiento para la instalación, pero a la inversa.

6.2 Sustitución de la placa deflectora

- Realice los pasos 1-3 indicados bajo la **fig. 9**.
- Así podrá acceder fácilmente a los deflectores **(fig. 9 B)** si es necesario quitarlos. Van apoyados en un saliente del lateral y en el colector de aire **(fig. 9 D).**
- Inclínelos hacia abajo y sáquelos por la puerta.

Para la reinstalación, siga el mismo procedimiento pero a la inversa.

7.0 Mantenimiento

7.1 Limpieza y retirada del hollín

Pueden acumularse depósitos de hollín en las superficies internas de la estufa durante el uso. El hollín es un buen aislante y, por lo tanto, reducirá la potencia calorífica de la estufa. Si se acumulan depósitos de hollín mientras usa el producto, puede eliminarlos fácilmente mediante un limpiador de hollín.

Para evitar que se forme una capa de agua y alquitrán en la estufa, debe dejar que el fuego arda con intensidad regularmente para eliminar la capa. Es necesario realizar una limpieza interna anual para obtener el mejor rendimiento térmico del producto. Es buena idea hacerlo al limpiar la chimenea y los tubos de tiro.

7.2 Deshollinar los tubos de tiro en la chimenea

Los tubos de tiro deben deshollinarse a través de la trampilla del tubo de tiro o a través de la abertura de la puerta.
Será necesario desmontar primero una de las placas deflectoras para poder hacerlo.

7.3 Inspección de la estufa

Jøtul le recomienda que inspeccione detenidamente la estufa después de limpiarla/deshollinarla. Revise todas las superficies visibles en busca de grietas. Compruebe también que estén selladas todas las uniones y que todas las juntas estén en la posición correcta. Será necesario sustituir cualquier junta que presente signos de desgaste o deformación.

Limpie cuidadosamente las ranuras de la junta, aplique adhesivo cerámico (disponible en su distribuidor de Jøtul más cercano) y coloque la junta en su sitio apretando bien. La unión se secará con rapidez.

7.4 Mantenimiento exterior

Los productos pintados pueden cambiar de color tras varios años de uso. Deberá limpiarse y cepillarse la superficie para retirar cualquier partícula suelta antes de aplicar pintura nueva.

8.0 Equipo opcional

8.1 Cubierta para la pata: conexión de aire exterior

N.º cat. 51012329

8.2 Cubierta superior de saponita - 50 mm, completa

N.B.: No para la Jøtul F 162 C / Jøtul F 163 C.
N.º cat. 51012327

9.0 Garantía

Jøtul AS ofrece a sus clientes una garantía de diez años, con derecho a devolver los elementos externos de hierro fundido si presentan defectos como resultado de materiales y/o mano de obra defectuosa después de la compra/instalación original de la estufa. El comprador tendrá derecho a devolver el producto, siempre que la estufa haya sido instalada de conformidad con las normativas y leyes vigentes, y de acuerdo con las instrucciones de instalación y funcionamiento de Jøtul.

La garantía no cubre:

La instalación de accesorios opcionales, por ejemplo la rectificación del estado del tiro o el suministro de aire ni otras circunstancias fuera del control de Jøtul. La garantía no cubre los consumibles, como las placas de combustión, deflectores de humos, rejillas, ladrillos refractarios, amortiguadores ni juntas, puesto que se deterioran con el tiempo debido al uso normal. La garantía no cubre los daños provocados como resultado del uso de combustible inapropiado para encender el fuego, como restos de madera, madera pintada o impregnada, recortes de tablas, aglomerado, etc. Si se usa un combustible inapropiado puede producirse un sobrecalentamiento: la estufa se pone al rojo, lo que produce el descoloramiento de la pintura y el agrietamiento de las piezas de hierro fundido.

La garantía no será válida para los daños ocasionados mientras el producto está en tránsito entre el distribuidor y el lugar de entrega. La garantía tampoco será válida para los daños ocasionados por la utilización de piezas no originales.

Sommario

Manuale di installazione con dati tecnici

1.0 Conformità alle leggi 37

2.0 Dati tecnici 37

3.0 Sicurezza 41

4.0 Installazione 42

5.0 Utilizzo giornaliero 45

6.0 Assistenza 46

7.0 Manutenzione 47

8.0 Accessori opzionali 47

9.0 Garanzia 47

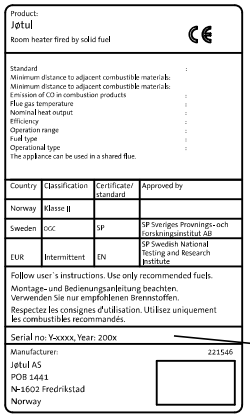

Su tutti i nostri prodotti è applicata un'etichetta che indica il numero di serie e l'anno. Annotare questo numero dove indicato nelle istruzioni di installazione.

Citare sempre questo numero di serie quando ci si rivolge al rivenditore o a Jøtul.

Serial no.

1.0 Conformità alle leggi

L'installazione di un caminetto deve avvenire in base ai codici e alle normative locali in vigore in ciascun paese.

Durante l'installazione del prodotto devono essere rispettate tutte le normative locali, incluse quelle che fanno riferimento a standard nazionali ed europei.

Leggere attentamente il manuale prima di procedere all'installazione. Prima di utilizzare il prodotto, l'impianto deve essere ispezionato da personale qualificato.

Sul prodotto è applicata una targhetta, realizzata in materiale termoresistente e contenente dati e informazioni sull'identificazione e documentazione del prodotto **(fig. 3 B)**.

2.0 Dati tecnici

	Jøtul F 162 **Jøtul F 162 C**	**Jøtul F 163** **Jøtul F 163 C**
Materiale:	ghisa	ghisa
Finitura:	vernice	vernice/smalto
Combustibile:	legna	legna
Lunghezza massima dei ciocchi:	33 cm	33 cm
Scarico fumi:	superiore/ posteriore	superiore/ posteriore
Dimensioni condotto scarico fumi:	Ø 150 mm, sezione trasversale 177 cm²	Ø 150 mm, sezione trasversale177cm²
Peso F 162 e F 163:	115 kg	115 kg
Peso F 162 C e F 163 C:	134 kg	134 kg
Accessori opzionali:	coprimontante posteriore, piano superiore in pietra ollare completo (non per la F 162 C / F 163 C)	coprimontante posteriore, piano superioreinpietra ollare completo (non per la F162C /F 163 C)
Dimensioni e distanze:	vedere la **fig. 1**	vedere la **fig. 1**

Dati tecnici a norma EN 13240

	Jøtul F 162 **Jøtul F 162 C**	**Jøtul F 163** **Jøtul F 163 C**
Potenza termica nominale:	5 kW	5 kW
Portata dei fumi:	5,0 g/s	5,0 g/s
Tiraggio consigliato per la canna fumaria:	12 Pa	12 Pa
Efficienza:	83% a 5,9 kW	82% a 5,9 kW
Emissioni di CO (13% O_2):	0,06%	0,10%
Emissioni di CO (13% O_2):	792 mg/Nm^3	1242 mg/Nm^3
Temperatura dei fumi:	260° C	260° C
Tipo di funzionamento:	intermittente	intermittente

Per combustione intermittente, in questo contesto, si intende il normale utilizzo del caminetto, ossia con l'aggiunta di combustibile non appena da quello precedente si è formata una quantità adeguata di braci.

Jøtul F 162 / Jøtul F 163 / Jøtul F 162 C / Jøtul F 163 C

Fig. 1a

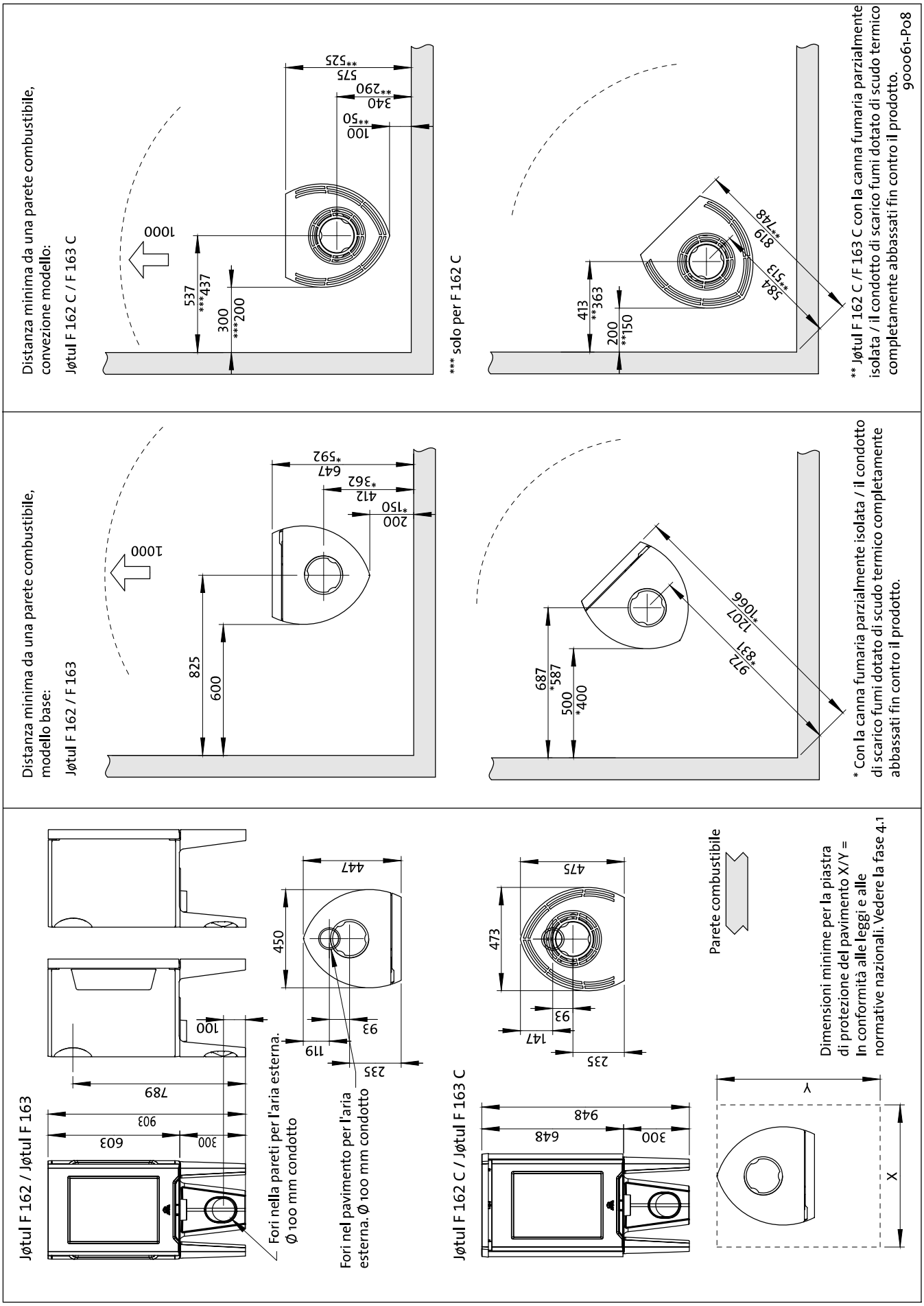

Fig. 1b

Jøtul F 162 / Jøtul F 163

Distanza minima dalla parete combustibile protetta da un muro tagliafuoco

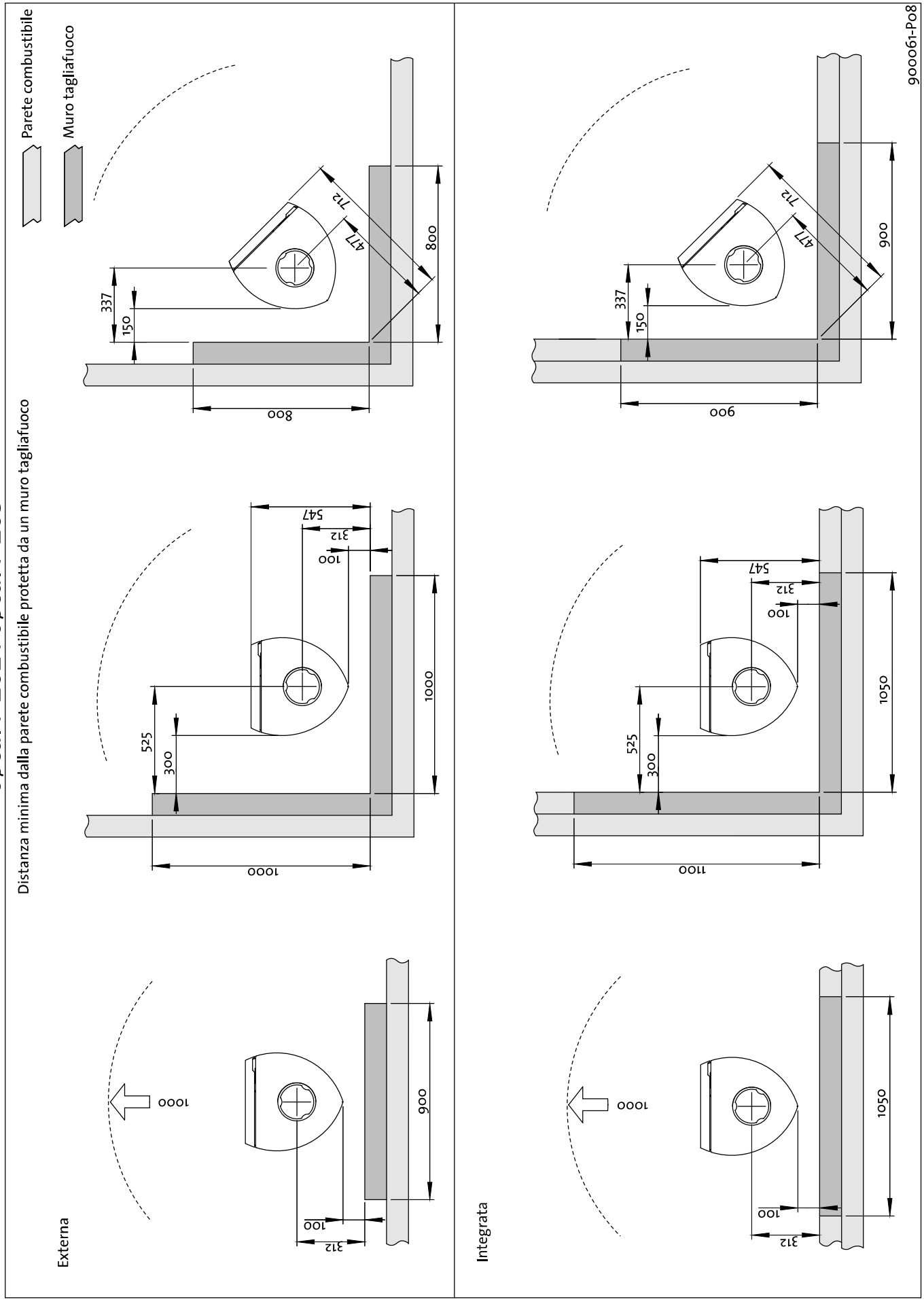

Fig. 1c

Jøtul F 162 C / Jøtul F 163 C

Distanza minima dalla parete combustibile protetta da un muro tagliafuoco

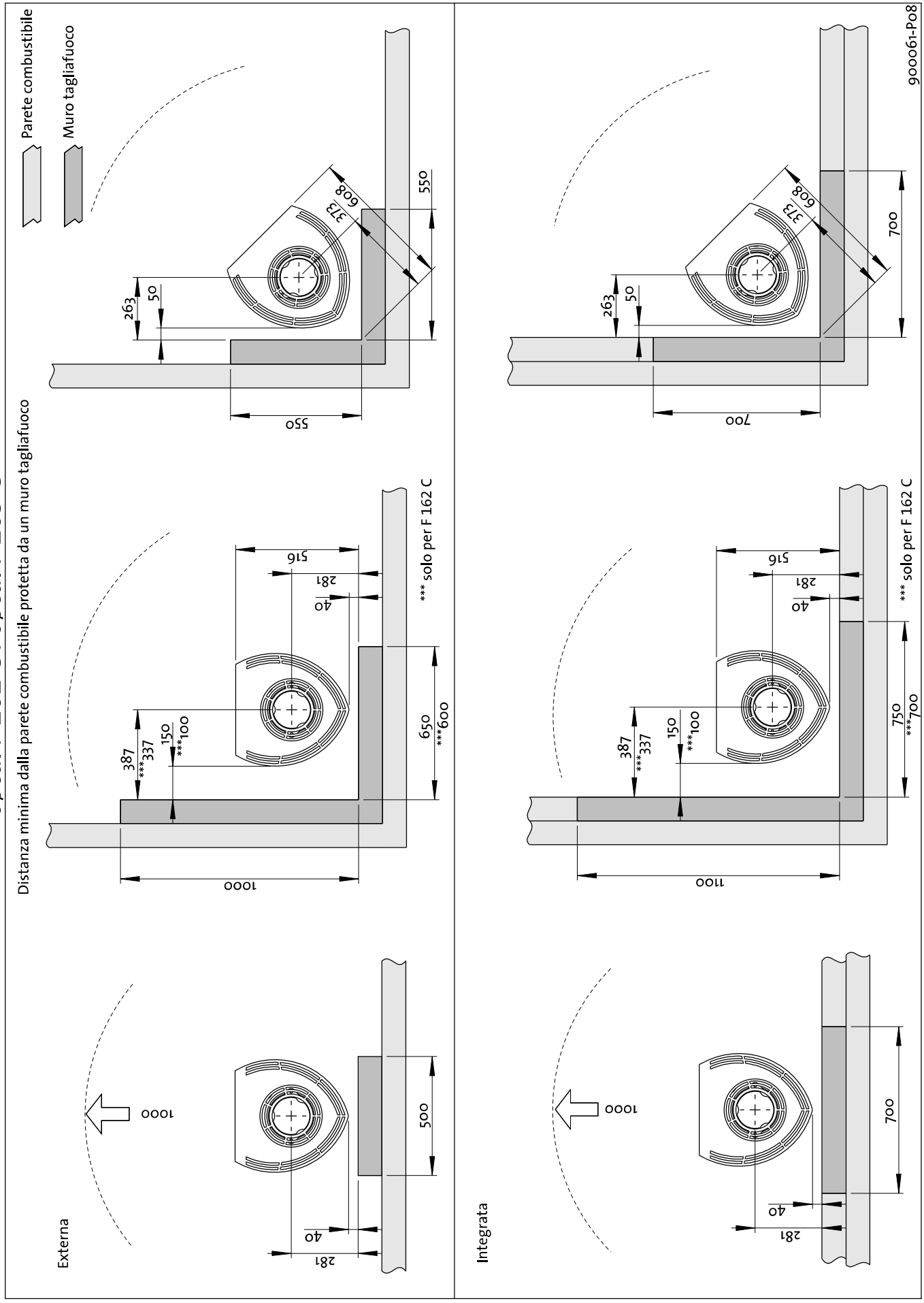

Circolazione dell'aria

Il condotto per l'aria esterna può essere inserito direttamente in Jøtul F 162 / Jøtul F 162 C / Jøtul F 163 / Jøtul F 163 C attraverso:

- Un tubo flessibile di circolazione dell'aria dall'esterno/dalla canna fumaria (solo se la canna fumaria presenta un proprio condotto per l'aria esterna) diretto al connettore dell'aria esterna del prodotto.

Fig. 2a, attraverso una parete esterna
Importante: L'apertura della presa d'aria esterna deve essere eseguita dall'interno come in figura usando gli strumenti protettivi compresi gli occhiali.

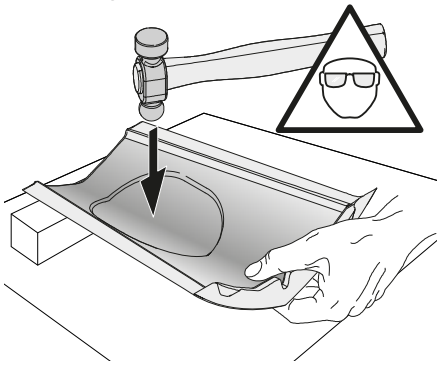

Consigli: è un vantaggio rimuovere la gamba posteriore prima di eseguire l'apertura della presa d'aria.

1. Appoggiare su un lato, con cautela, il prodotto su un cartone per proteggerlo dai graffi.
2. Rimuovere la gamba posteriore.
3. Usare un pesante martello e picchiare con decisione nel mezzo del cerchio.

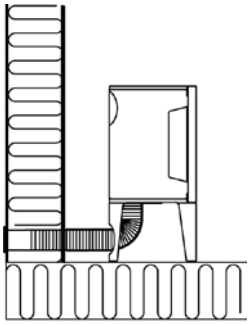

Fig. 2b, attraverso il pavimento e la piastra di terra

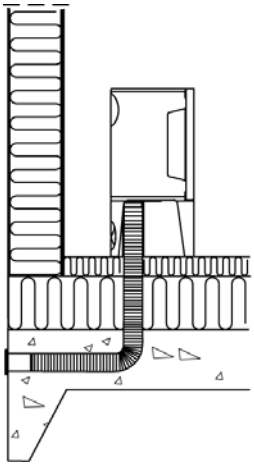

Fig. 2c, attraverso il pavimento e il basamento

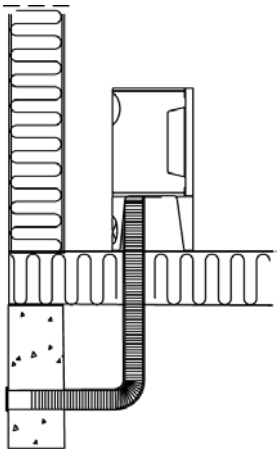

Fig. 2d, indirettamente attraverso una parete esterna

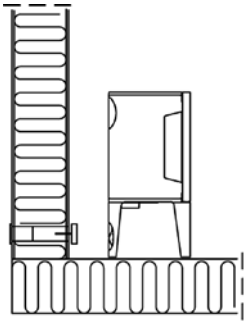

3.0 Sicurezza

Nota: per garantire prestazioni e sicurezza ottimali, le stufe Jøtul devono essere montate da un installatore qualificato.

Qualunque modifica al prodotto da parte del distributore, installatore o consumatore può comportare un funzionamento imprevisto del prodotto e delle funzionalità di sicurezza. Lo stesso si applica all'installazione di accessori o di extra opzionali non forniti da Jøtul. Ciò può riguardare anche componenti essenziali per il funzionamento e la sicurezza del caminetto eventualmente smontati o rimossi.

In tutti i casi citati, il produttore non potrà essere ritenuto responsabile o punibile per il prodotto, rendendo nullo e non valido ogni reclamo.

3.1 Misure di prevenzione antincendio

Ogni utilizzo del caminetto ha in sé un certo elemento di pericolo. Pertanto, è necessario seguire attentamente le seguenti istruzioni:

- Le distanze minime di sicurezza in caso di utilizzo del caminetto sono fornite nella **fig. 1**.
- Assicurarsi che gli arredi e altri materiali infiammabili non siano troppo vicini al caminetto. I materiali infiammabili non devono mai essere posizionati entro 1000 mm dal caminetto.
- Attendere l'estinzione del fuoco. Non spegnere mai le fiamme con acqua.
- Il caminetto acceso diventa caldo e può causare bruciature se toccato.
- Rimuovere la cenere solo con il caminetto freddo. La cenere

può contenere braci calde, pertanto deve essere collocata in un contenitore ignifugo.
- La cenere deve essere collocata all'esterno o svuotata in un luogo in cui non rappresenterà un pericolo potenziale di incendio.

In caso di incendio della canna fumaria

- Chiudere tutte le aperture e le prese d'aria.
- Tenere chiusa la porta del camino.
- Verificare la presenza di fumo in cantina e in soffitta.
- Chiamare i vigili del fuoco.
- Prima di utilizzare di nuovo il camino e la canna fumaria dopo un incendio, è necessario che vengono controllati da un tecnico specializzato che ne assicuri l'integrità e il corretto funzionamento.

4.0 Installazione

N.B. Prima di iniziare l'installazione, assicurarsi che il caminetto non sia danneggiato.
Il prodotto è pesante! Accertarsi di ricevere assistenza durante il montaggio e l'installazione del caminetto.

4.1 Pavimento

Fondamenta

Accertarsi che la solidità del pavimento sia sufficiente per il caminetto. Per le indicazioni relative al peso, vedere la sezione **"2.0 Dati tecnici"**. Durante l'installazione, si consiglia di rimuovere le eventuali pavimentazioni non ancorate alle fondamenta (le cosiddette 'pavimentazioni galleggianti'.

Protezione dei pavimenti in materiale combustibile

Se occorre installare il caminetto su un pavimento in materiale combustibile, coprire con una piastra di metallo, o di un altro materiale non combustibile, la parte di pavimento situata sotto e davanti al caminetto. Lo spessore minimo consigliato è pari a 0,9 mm.
È inoltre opportuno rimuovere da sotto la lastra di protezione del pavimento le eventuali pavimentazioni in materiali infiammabili, come linoleum, moquette, ecc.

La piastra deve essere conforme alle leggi e alle normative nazionali.
Contattare le autorità competenti in materia di edilizia in relazione alle disposizioni e ai requisiti di installazione.

4.2 Pareti (Fig. 1a)

Distanza dalle pareti in materiale combustibile

È possibile utilizzare il caminetto con un condotto di scarico dei fumi non isolato, a condizione che la distanza dalle pareti in materiale combustibile rispetti i valori indicati nella **Fig. 1**.
Distanza dalle pareti in caso di condotto di scarico dei fumi isolato: Vedere la **Fig. 1.**

Distanza dalle pareti protette mediante un muro tagliafuoco (fig. 1b e fig. 1c)

Contattare le autorità competenti in materia di edilizia in relazione alle disposizioni e ai requisiti di installazione.

Requisiti sui muri tagliafuoco
I muri tagliafuoco devono essere spessi almeno **100 mm** ed realizzati in mattoni, mattoni di cemento o cemento leggero. È possibile utilizzare anche altri materiali e strutture provviste della necessaria documentazione.

Distanza dalle pareti non combustibili

Per parete non combustibile si intende un muro non portante realizzato in cemento o mattoni continui.

Contattare le autorità competenti in materia di edilizia in relazione alle disposizioni e ai requisiti di installazione.

4.3 Canne fumarie e condotti di scarico dei fumi

- È possibile collegare il caminetto a una canna fumaria e a un condotto di scarico dei fumi approvati per apparati con fiamma alimentata a combustibile solido, i cui fumi siano alla temperatura specificata nella sezione **"2.0 Dati tecnici"**.
- La sezione trasversale della canna fumaria deve essere pari o superiore a quella del condotto di scarico dei fumi. Per il calcolo della sezione trasversale corretta della canna fumaria, vedere la sezione **"2.0 Dati tecnici"**.
- Se la sezione trasversale della canna fumaria è sufficiente, è possibile collegare alla stessa canna fumaria più apparati con fiamma alimentata a combustibile solido.
- Il collegamento con la canna fumaria deve essere realizzato in conformità alle istruzioni di installazione fornite dal produttore della stessa.
- Prima di praticare un foro nella canna fumaria, montare e posizionare provvisoriamente il caminetto, in modo da contrassegnare correttamente la sua posizione e quella del foro sulla canna fumaria. Per le dimensioni minime, vedere la **Fig. 1** .
- Assicurarsi che il condotto di scarico dei fumi sia inclinato verso l'alto fino alla canna fumaria.
- Utilizzare un condotto di scarico dei fumi dotato di un portello che consenta di pulirlo.

Tenere presente che è particolarmente importante che i collegamenti abbiano una certa flessibilità per evitare che eventuali movimenti durante la fase di installazione causino la formazione di crepe.

N.B. Per il funzionamento corretto del prodotto, è molto importante che i collegamenti siano corretti e ben sigillati.

Tiraggio della canna fumaria; vedere la sezione «2.0 Dati tecnici». Se il tiraggio è eccessivo, è possibile controllarlo installando e azionando valvola di regolazione.

4.4 Montaggio prima dell'installazione

Il prodotto viene consegnato in un unico imballaggio.
Dopo avere disimballato il caminetto, verificare che lo stesso non sia danneggiato e che le manopole di regolazione funzionino.

4.5 Rimozione del meccanismo di chiusura automatica dello sportello

Il prodotto viene fornito con il meccanismo di chiusura automatica dello sportello preinstallato. Se non si desidera utilizzarlo, è possibile rimuovere tale meccanismo.

Fig. 3

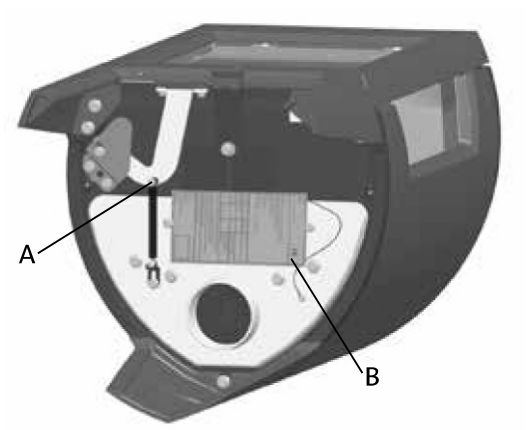

1. Rimuovere la vite e il dado **(Fig. 3 A).**
2. Sganciare e rimuovere la molla.

4.6 Installare la canna fumaria nell'uscita fumi posteriore

Il prodotto esce dalla fabbrica con l'attacco della canna fumaria preparato per uscita superiore.

NB! Precedere come segue per installare la stufa con l'uscita fumi posteriore:

Fig. 4

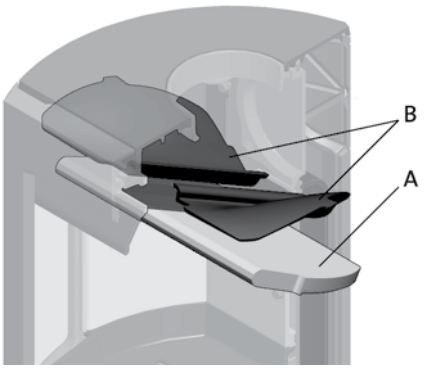

1. Sollevare con cura il parafiamma **(fig. 4 A)**.
2. Rimuovere una delle piastre refrattarie laterali sollevandole leggermente ed estraendole. (se si utilizzano degli attrezzi, prestare attenzione al fatto che le piastre di vermiculite possono danneggiarsi se non vengono trattate con cura).
3. Rimuovere il parafiamma.
4. Rimuovere l'altra piastra refrattaria laterale.
5. Rimuovere i deflettori di aspirazione **(fig. 4 B)**.

Fig. 5

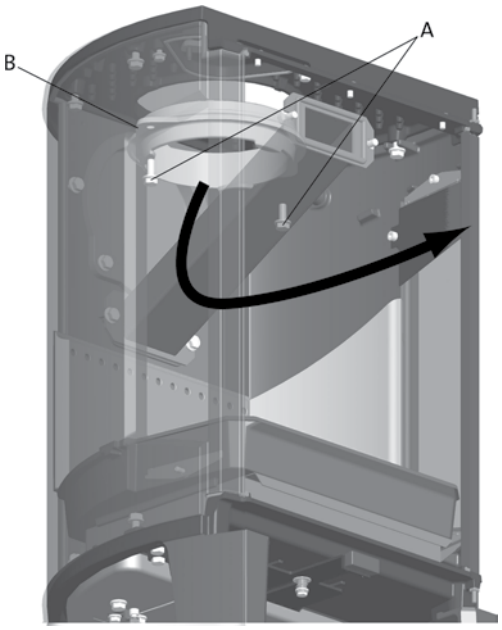

6. Svitare le viti **(fig. 5 A)** e rimuovere l'attacco della canna fumaria **(fig. 5 B)** dall'uscita fumi superiore dall'interno della camera di combustione.

Fig. 6a

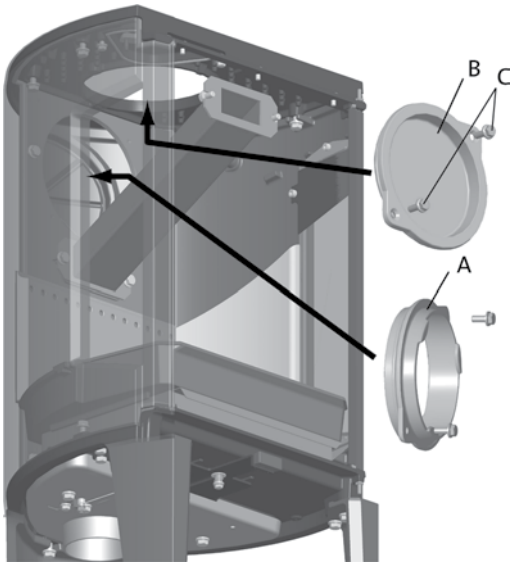

7. Svitare le viti **(fig. 6a C)** e rimuovere il coperchio **(fig. 6a B)** dall'uscita fumi posteriore dall'interno della camera di combustione.

Fig. 6b

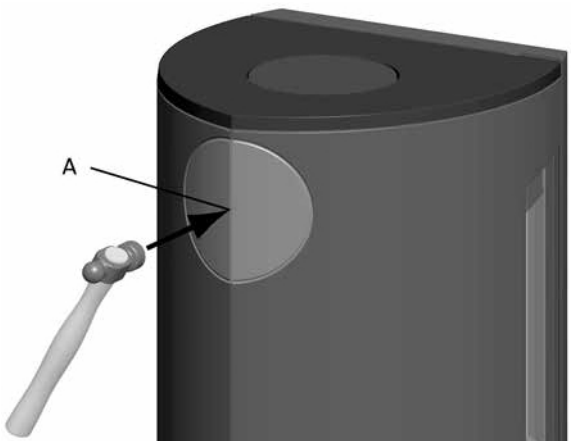

8. Rimuovere la copertura posteriore **(fig. 6b A)**.
9. Avvitare l'attacco per la canna fumaria **(fig. 6a A)** nell'interno della camera di combustion, dove in precedenza era situato il coperchio.
10. Avvitare il coperchio **(fig. 6a B)** dove in precedenza era avvitato l'attacco per la canna fumaria.
11. Riposizionare l'estrattore fumi **(fig. 4 B)** e il deflettore **(fig. 4 A)**.

4.7 Controllo delle funzioni

Una volta montato il prodotto, controllare sempre le funzioni di regolazione. Queste devono muoversi facilmente e funzionare in modo soddisfacente.

I modelli Jøtul F 162, F 162 C, F 163 e F 163 C sono dotati dei seguenti dispositivi di regolazione:

Valvola di accensione / presa d'aria

Accensione

Fig. 7a

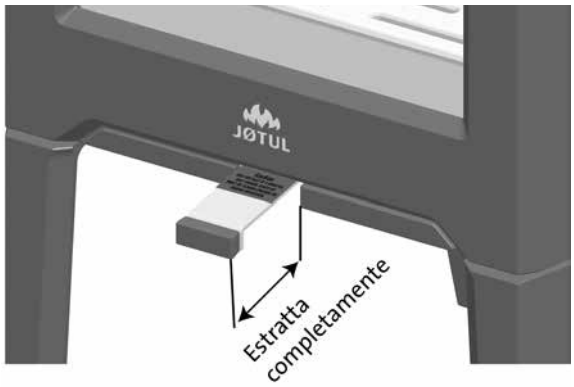

- Aprire le prese d'aria e di accensione estraendo completamente le manopole. (Utilizzare un guanto o simile per proteggere la mano nel caso in cui le manopole siano calde.)

- Posizionare due ceppi in fondo alla camera di combustione e impilare le fascine in strati.
- Infine, posizionare un ceppo di dimensioni medie in cima alla pila.
- Posizionare 2 o 3 bricchette o ramoscelli sotto lo strato superiore di fascine e accendere il fuoco.

Riscaldamento

Fig. 7b

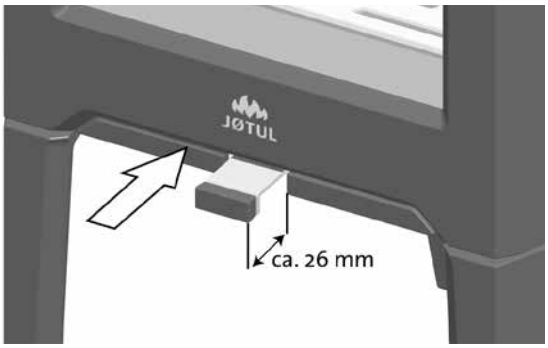

- Quando la legna ha preso fuoco e brucia correttamente, fare scorrere la valvola di accensione / presa d'aria **(Fig. 7 B)** fino a quando è estesa di circa 26 mm.
- Chiudere la porta.
- Dopodiché, è possibile variare il tasso di combustione per ottenere il calore desiderato regolando la presa d'aria.
- Controllare che abbia inizio la postcombustione (combustione secondaria). Ciò viene indicato dalla presenza di fiamme gialle e guizzanti davanti ai fori sotto il parafiamma.
- Se il flusso d'aria è normale, sarà possibile chiudere la porta e il fuoco si regolerà autonomamente.

Aggiunta della legna

Alimentare frequentemente la stufa, aggiungendo solo piccoli quantitativi di combustibile alla volta. Se la stufa è troppo piena, il calore creato potrebbe causare sollecitazioni estreme della canna fumaria. Aggiungere con moderazione il combustibile al fuoco. Evitare i fuochi che bruciano senza fiamme, dato che ciò produrrà il massimo inquinamento. Un fuoco ottimale si ottiene con una buona bruciatura e un fumo in uscita dalla canna fumaria quasi invisibile.

4.8 Pericolo di surriscaldamento

Il caminetto non deve mai essere utilizzato in modo tale da causare surriscaldamento

Il surriscaldamento si verifica in presenza di un eccesso di combustibile e/o di aria, causando un calore eccessivo. Un segno evidente di surriscaldamento è la presenza di un bagliore rosso in alcune parti del caminetto. Se ciò dovesse accadere, ridurre immediatamente l'apertura della presa d'aria.

5.0 Utilizzo giornaliero

Odori al primo utilizzo del caminetto

Quando il caminetto viene utilizzato per la prima volta, può emettere un gas irritante dal lieve odore. Ciò si verifica perché la vernice si secca. Il gas non è tossico, tuttavia il locale deve essere ventilato approfonditamente. Lasciare bruciare il fuoco con un tiraggio elevato, fino a far scomparire ogni traccia di gas, fumo e odore.

5.1 Funzionamento

Consiglio per l'alimentazione della stufa

Nota: i ceppi conservati all'aperto o in un locale freddo devono essere collocati all'interno 24 ore prima dell'uso, al fine di portarli alla temperatura ambiente.

Ci sono vari modi per alimentare la stufa, tuttavia è sempre importante prestare attenzione a ciò che viene collocato nella stufa. Consultare la sezione **"Qualità della legna"**.

Qualità della legna

Per "legna di qualità" si intendono tipi di legna generalmente conosciuti come la betulla, l'abete e il pino.

I ceppi devono essere asciugati, in modo che il contenuto di umidità non sia superiore al 20%.
A tal fine, si consiglia di tagliare i ceppi alla fine dell'inverno. Tagliarli e impilarli in modo da garantire una buona ventilazione. Le pile di legna devono essere coperte per proteggere i ceppi dalla pioggia. Portare i ceppi all'interno all'inizio dell'autunno e impilarli/conservarli per utilizzarli in inverno.

Prestare particolare attenzione a non utilizzare mai i seguenti materiali come combustibile per il caminetto:
- Rifiuti domestici, buste di plastica, ecc.
- Legname verniciato o impregnato *(in quanto estremamente tossico)*.
- Assi di legno laminato.
- Cumuli di legname trasportato dalla corrente

Possono danneggiare il prodotto e sono anche inquinanti.

Consumo di legna

Uso di legna con una produzione nominale di calore: circa **1,6 kg/h**. Le dimensioni corrette dei ciocchi costituiscono un altro fattore importante per un giusto consumo di combustibile. Le dimensioni dei ciocchi devono essere pari a:

Fascine:
Lunghezza: 23 - 33 cm
Diametro: 2 - 5 cm
Quantità per ciascuna accensione: 6 - 8 pezzi

Uso quotidiano

Legna da ardere (ciocchi tagliati):
Lunghezza: 23 - 33 cm
Diametro: circa 8 cm
Intervalli di aggiunta della legna: circa ogni 45 minuti
Dimensioni del carico: 1,2 kg
Quantità per ciascun carico: 2 pezzi

La produzione nominale di calore viene raggiunta quando l'apertura della presa d'aria è pari al 57 % circa.

Uso Massimo

Carico Massimo: 2,9 Kg/h (massimo 3 ceppi/2,2 Kg per carico).

5.2 Eliminazione della cenere

I modelli Jøtul F 162 / F 162 C / F 163 / F 163 C sono dotati di un ceneraio che agevola l'eliminazione della cenere.

Fig. 8

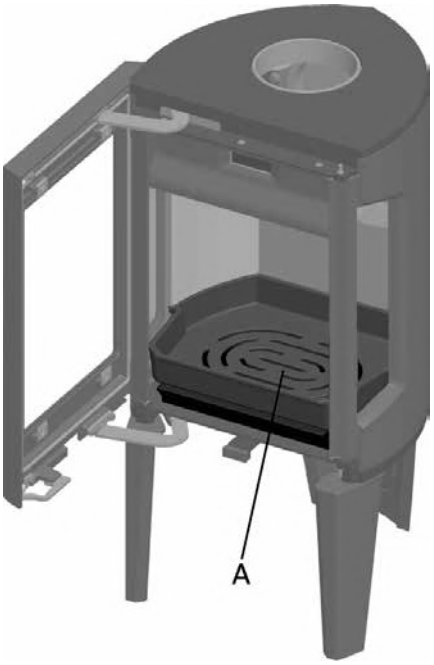

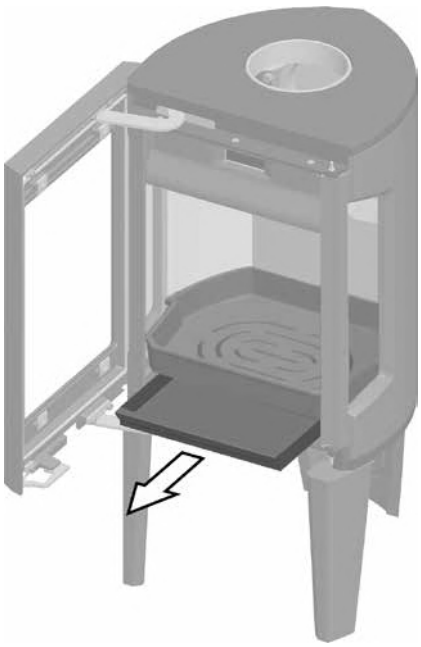

1. Raschiare la cenere facendola cadere nel ceneraio attraverso la grata **(Fig. 8 A)** presente nella piastra di base. Utilizzare un guanto per afferrare la maniglia del ceneraio.
2. Accertarsi che il ceneraio non sia pieno al punto da impedire la fuoriuscita della cenere attraverso la grata.

6.0 Assistenza

Avvertenza: È vietata qualunque modifica non autorizzata del prodotto.
Utilizzare esclusivamente ricambi originali.

6.1 Sostituzione delle piastre refrattarie/ della piastra inferiore interna

Fig. 9

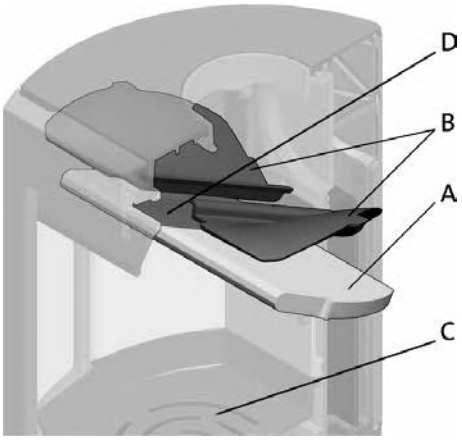

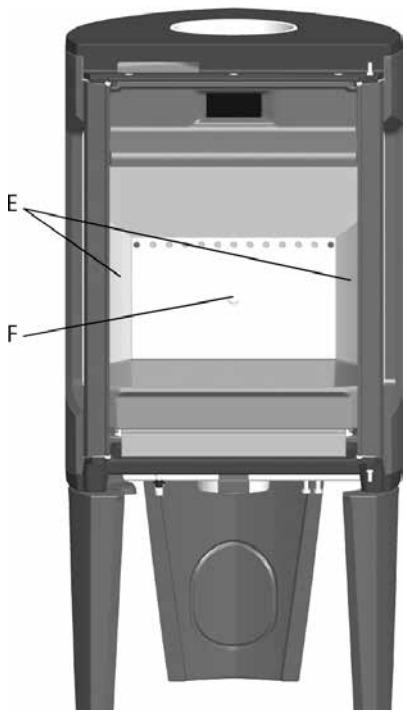

1. Sollevare con cura il parafiamma **(fig. 9 A)**.
2. Rimuovere una delle piastre refrattarie laterali **(fig. 9 E)** sollevandole leggermente ed estraendole. (se si utilizzano degli attrezzi, prestare attenzione al fatto che le piastre di vermiculite possono danneggiarsi se non vengono trattate con cura).
3. Rimuovere il parafiamma.
4. Rimuovere l'altra piastra refrattaria laterale.
5. Svitare la vite M8 x 25 mm presente sulla piastra refrattaria posteriore **(Fig. 9 F)**, quindi rimuovere tale piastra.
6. A questo punto, sollevare e rimuovere la piastra inferiore interna **(Fig. 9 C)**.

Per l'installazione, eseguire la stessa procedura nell'ordine inverso.

6.2 Sostituzione del parafiamma

- Vedere la fase 1 - 3 sotto la **fig. 9**.
- A questo punto, se occorre rimuovere i deflettori è facile raggiungerli **(fig. 9 B)**. Sono situati su un pomello laterale e sul collettore dell'aria **(fig. 9 D).**
- Inclinarlo verso il basso ed estrarli attraverso lo sportello.

Per reinstallarlo, eseguire la stessa procedura nell'ordine inverso.

7.0 Manutenzione

7.1 Pulizia e rimozione della fuliggine

I depositi di fuliggine possono accumularsi sulle superfici interne del caminetto durante l'uso. La fuliggine è un buon isolante, pertanto riduce la potenza termica del caminetto. Se si accumulano depositi di fuliggine durante l'utilizzo del prodotto, per rimuoverli è sufficiente utilizzare un detergente specifico.

Al fine di impedire la formazione di acqua e di uno strato di pece liquida nel caminetto, consentire regolarmente la presenza di fiamme particolarmente calde per rimuovere lo strato. È richiesta una pulizia interna annuale per ottenere i migliori risultati termici dal prodotto. Si consiglia di effettuarla insieme alla pulizia della canna fumaria e dei condotti.

7.2 Pulizia dei condotti alla canna fumaria

I condotti devono essere spazzati attraverso l'apposito portello o l'apertura della porta.
Uno dei parafiamma dovrà prima essere rimosso per consentire l'esecuzione di tale operazione.

7.3 Ispezione del caminetto

Jøtul raccomanda di ispezionare attentamente il proprio caminetto dopo averlo spazzato e pulito. Controllare tutte le superfici visibili per individuare eventuali crepe. Controllare anche che tutti i giunti siano sigillati e che tutte le guarnizioni siano nelle posizioni corrette. Qualsiasi guarnizione che mostri segni di usura o deformazione deve essere sostituita.

Pulire accuratamente le scanalature delle guarnizioni, applicare della colla per ceramica (disponibile presso il proprio rivenditore Jøtul locale) e premere la guarnizione in posizione. Il giunto si asciugherà rapidamente.

7.4 Manutenzione esterna

Il colore dei prodotti verniciati può alterarsi dopo svariati anni di utilizzo. La superficie deve essere pulita e spazzolata in modo da rimuovere ogni residuo prima di applicare la nuova vernice.

8.0 Accessori opzionali

8.1 Coprimontante - condotto per l'aria esterna

N. cat. 51012329

8.2 Piano superiore completo in pietra ollare - 50 mm

Nota: Non per la Jøtul F 162 C / Jøtul F 163 C.
N. cat. 51012327

9.0 Garanzia

Jøtul AS fornisce ai propri clienti una garanzia decennale che prevede il diritto alla restituzione degli elementi esterni in ghisa, qualora mostrino difetti nei materiali e/o nella fabbricazione, dopo l'acquisto iniziale/installazione del caminetto. L'acquirente ha diritto alla restituzione delle merci nel caso in cui il caminetto sia stato installato in conformità alle leggi e normative vigenti e in conformità alle istruzioni di installazione e funzionamento di Jøtul.

La garanzia non copre:

L'installazione degli accessori opzionali, ad esempio per modificare le condizioni di tiraggio locale, la circolazione dell'aria o altre circostanze al di fuori del controllo di Jøtul. La garanzia non copre i consumabili, come le piastre refrattarie, i parafiamma, le grate del fuoco, le grate inferiori, gli elementi refrattari in mattone, le valvole di tiraggio e le guarnizioni, essendo soggetti a deterioramento nel tempo a causa della normale usura. La garanzia non copre i danni causati a seguito dell'utilizzo di un combustibile non idoneo per accendere il fuoco, come cumuli di legname trasportato dalla corrente, legna impregnata e verniciata, ritagli di assi, truciolato, ecc. Utilizzando combustibili non idonei, può verificarsi facilmente un surriscaldamento, una condizione in grado di causare lo scolorimento della vernice e crepe alle parti in ghisa.

La garanzia non è valida per i danni causati durante il passaggio del prodotto dal distributore all'indirizzo di consegna. Inoltre, la garanzia non è valida per i danni dovuti all'utilizzo di componenti non originali.

NEDERLANDS

Inhoudsopgave

Installatiehandleiding met technische gegevens

1.0 Wettelijke voorschriften 48

2.0 Technische gegevens 48

3.0 Veiligheid 52

4.0 Installatie 53

5.0 Dagelijks gebruik 56

6.0 Groot onderhoud 57

7.0 Onderhoud 58

8.0 Optionele accessoires 58

9.0 Garantie 58

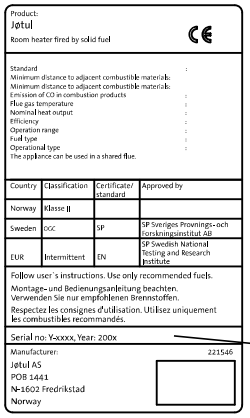
Product:
Jøtul
Room heater fired by solid fuel
CE

Standard :
Minimum distance to adjacent combustible materials:
Minimum distance to adjacent combustible materials:
Emission of CO in combustion products :
Flue gas temperature :
Nominal heat output :
Efficiency :
Operation range :
Fuel type :
Operational type :
The appliance can be used in a shared flue.

Country	Classification	Certificate/ standard	Approved by
Norway	Klasse II		
Sweden	OGC	SP	SP Sveriges Provnings- och Forskningsinstitut AB
EUR	Intermittent	EN	SP Swedish National Testing and Research Institute

Follow user´s instructions. Use only recommended fuels.
Montage- und Bedienungsanleitung beachten.
Verwenden Sie nur empfohlenen Brennstoffen.
Respectez les consignes d'utilisation. Utilisez uniquement les combustibles recommandés.

Serial no: Y-xxxx, Year: 200x

Manufacturer: 221546
Jøtul AS
POB 1441
N-1602 Fredrikstad
Norway

Al onze producten zijn voorzien van een label met een serienummer en een jaartal. Noteer dit nummer op de daarvoor bestemde plaats in de installatie-instructies.

Geef dit serienummer altijd door als u contact opneemt met uw leverancier of Jøtul.

Serial no.

1.0 Wettelijke voorschriften

Een haard moet in elk land volgens de lokale regels en voorschriften worden geïnstalleerd.

Bij het installeren van het product moeten alle lokale voorschriften, inclusief de bepalingen die betrekking hebben op nationale en Europese normen, worden nageleefd.

Lees de installatiehandleiding zorgvuldig door voordat u de kachel of haard installeert. Voordat het product wordt gebruikt, moet de installatie door een bevoegd persoon zijn geïnspecteerd.

Op het hitteschild bevindt zich een typeplaatje dat is gemaakt van hittebestendig materiaal. Op het typeplaatje staan typegegevens van het product en verwijzingen naar documentatie.

2.0 Technische gegevens

	Jøtul F 162 **Jøtul F 162 C**	**Jøtul F 163** **Jøtul F 163 C**
Materiaal:	Gietijzer	Gietijzer
Afwerking:	Lak	Lak/emaille
Brandstof:	Hout	Hout
Max. lengte blokken:	33 cm	33 cm
Kacheluitlaat:	Boven/achter	Boven/achter
Afmeting kachelpijp:	Ø 150 mm, 177 cm² doorsnede	Ø 150 mm, 177 cm² doorsnede
Gewicht F 162 / F 163:	115 kg	115 kg
Gewicht F 162 C/F 163 C:	134 kg	134 kg
Optionele accessoires:	Afdekking voor achterpoot, spekstenen bovenkant - compleet (niet voor F 162 C / F 163 C)	Afdekking voor achterpoot, spekstenen bovenkant - compleet (niet voor F 162 C / F 163 C)
Afmetingen, afstanden:	Zie **fig. 1**	Zie **fig. 1**

Technische gegevens conform EN 13240:

	Jøtul F 162 **Jøtul F 162 C**	**Jøtul F 163** **Jøtul F 163 C**
Nominale warmteafgifte:	5 kW	5 kW
Massastroom rookgas:	5,0 g/s	5,0 g/s
Aanbevolen schoorsteentrek:	12 Pa	12 Pa
Efficiëntie:	83%@5,9 kW	82%@5,9 kW
CO-uitstoot (13% O_2):	0,06 %	0,10 %
CO-uitstoot (13% O_2):	792 mg/Nm^3	1242 mg/Nm^3
Rookgastemperatuur:	260° C	260° C
Werkingstype:	cyclisch	cyclisch

Onder cyclische verbranding wordt normaal gebruik van een haard verstaan. Dit houdt in dat een nieuwe verbrandingskamer wordt ontstoken zodra de brandstof is opgebrand tot de juiste hoeveelheid gloeiende as.

Fig. 1a

Jøtul F 162 / Jøtul F 163 / Jøtul F 162 C / Jøtul F 163 C

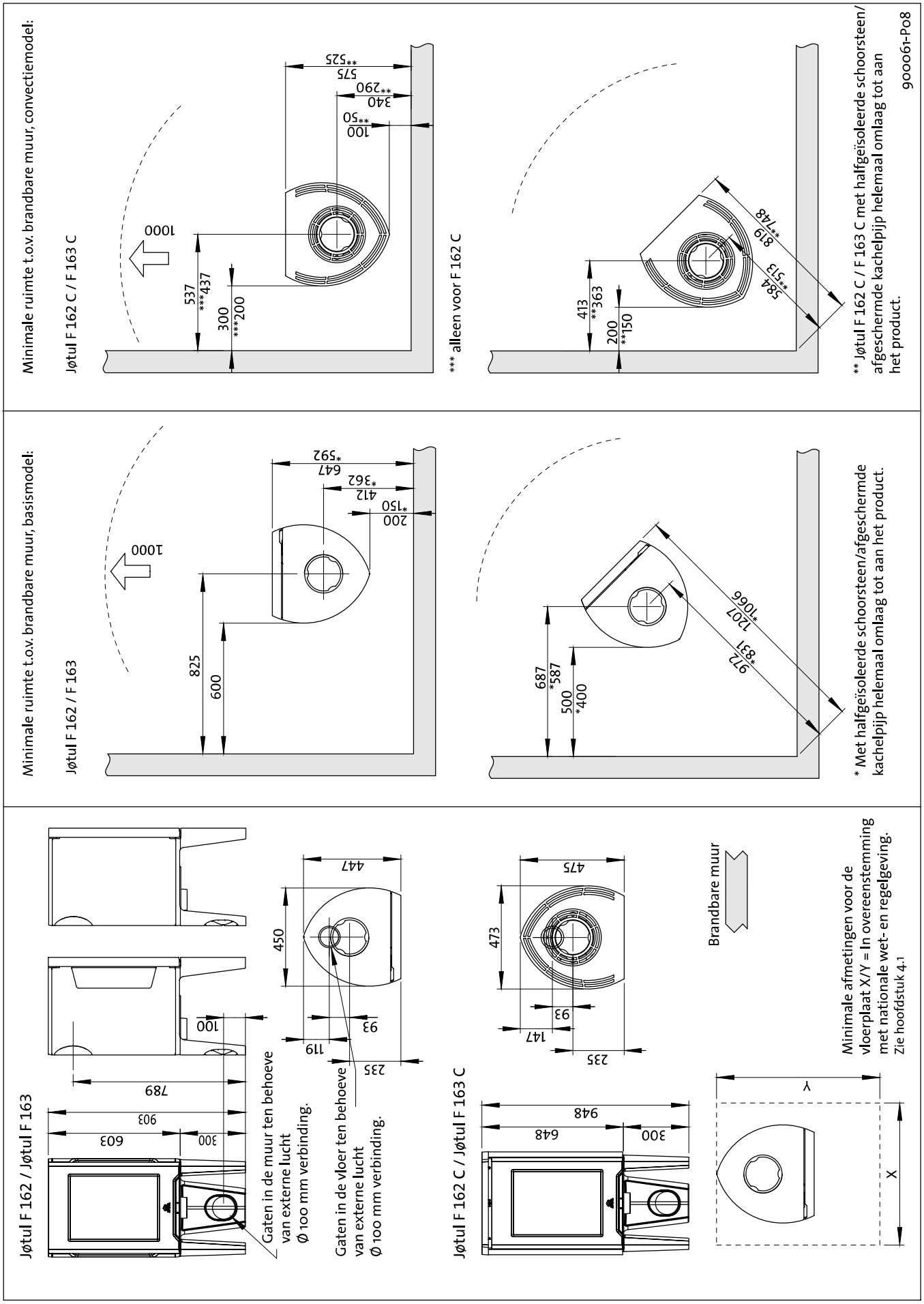

Fig. 1b

Jøtul F 162 / Jøtul F 163

Minimale afstand tot brandbare muur beschermd door brandmuur:

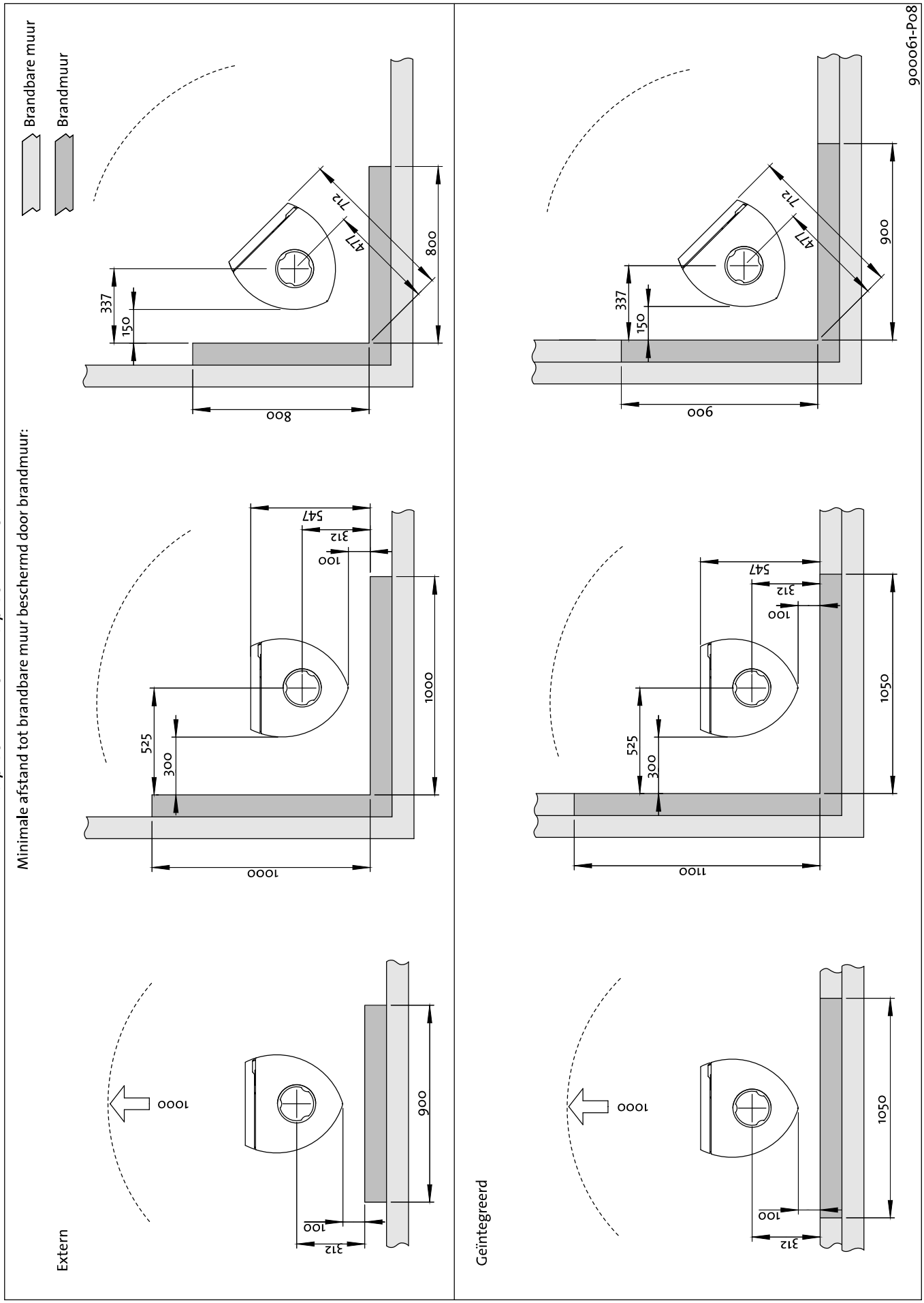

Fig. 1c

Jøtul F 162 C / Jøtul F 163 C

Minimale afstand tot brandbare muur beschermd door brandmuur:

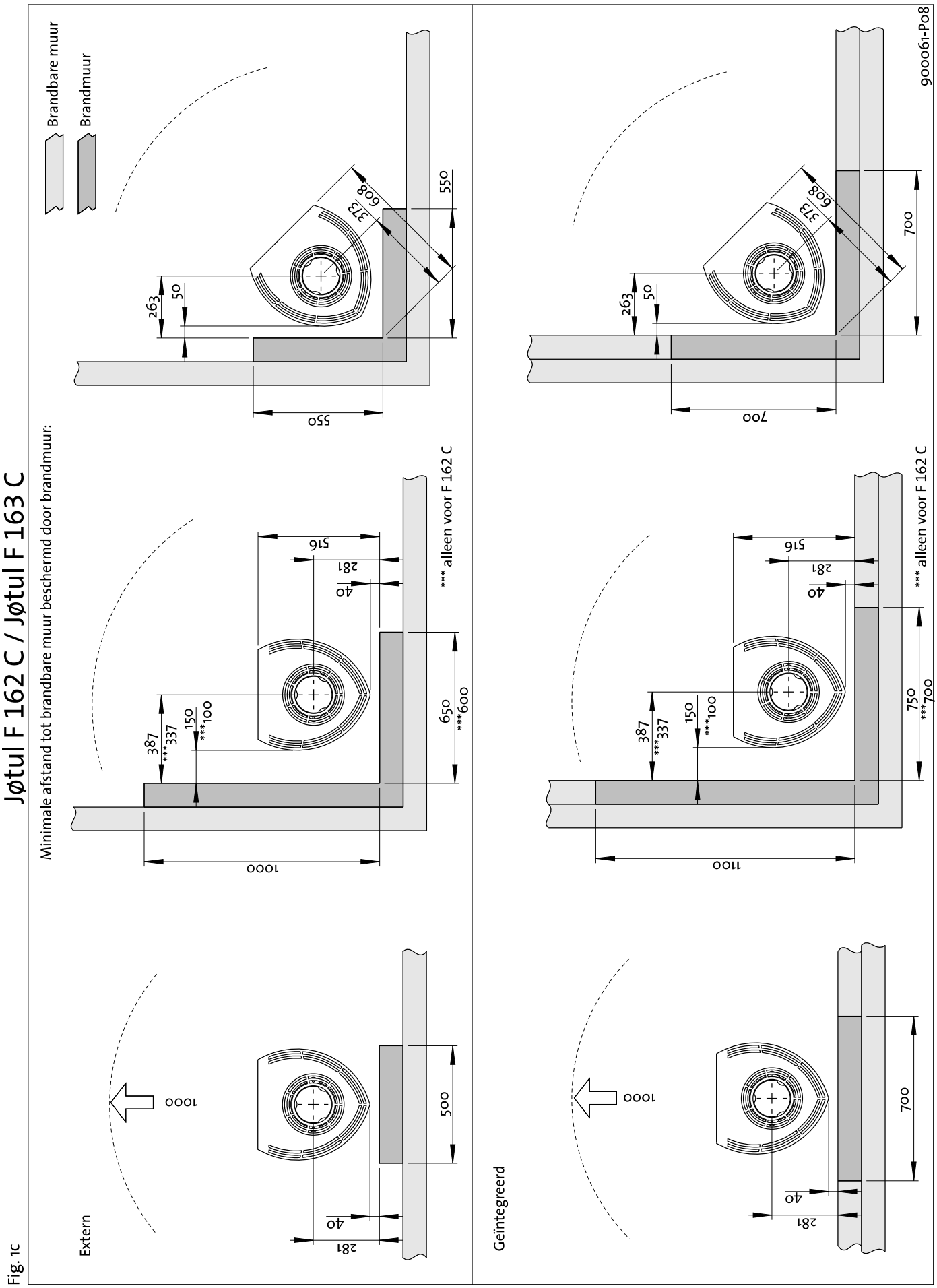

Luchttoevoer

De externe luchtaansluiting kan direct op de Jøtul F 162 / Jøtul F 162 C / Jøtul F 163 / Jøtul F 163 C worden aangesloten door middel van:

- door een flexibele toevoerslang van buitenaf/schoorsteen (alleen als de schoorsteen een eigen kanaal heeft voor externe lucht) op de externe luchtaansluiting van het product.

Fig. 2a, via een buitenmuur
BELANGRIJK! De knockout voor de buitenlucht verbinding moet worden verwijderd vanuit de binnenkant. Gebruik een veiligheidsbril.

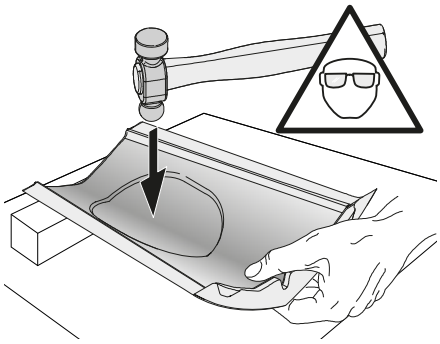

TIP: Het is een groot voordeel als de achterste poot is gedemonteerd verwijderen van de knockout.

1. Leg de kachel voorzichtig naar beneden op zijn kant. U kunt de kartonnen verpakking op de vloer om het te beschermen tegen krassen, etc.
2. Verwijder de achterste poot.
3. Gebruik een zware bolhamer en sla hard op het midden van de knockout.

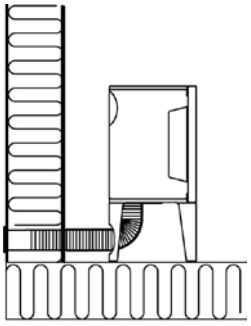

Fig. 2b, via de vloer en grondplaat

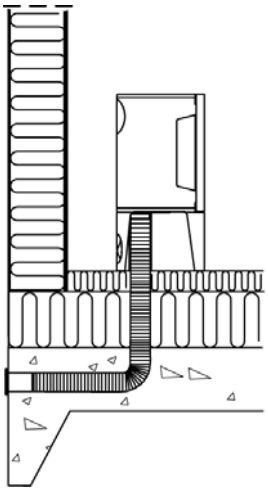

Fig. 2c, via de vloer en kelder

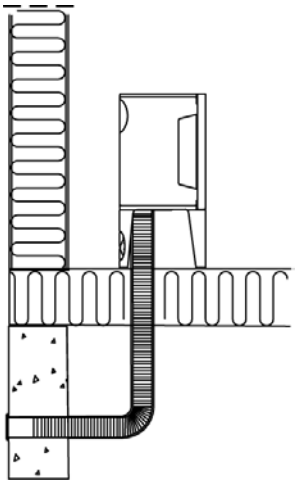

Fig. 2d, indirect via een buitenmuur

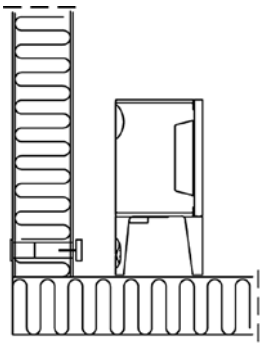

3.0 Veiligheid

NB! Om zeker te zijn van optimale prestaties en veiligheid, dienen de kachels van Jøtul altijd te worden geplaatst door een gekwalificeerde installateur.

Aanpassingen aan het product door de distributeur, installateur of consument kunnen ertoe leiden dat het product en de beveiligingen niet naar behoren functioneren. Hetzelfde geldt voor de installatie van niet door Jøtul geleverde accessoires of optionele extra's. Dit kan ook het geval zijn indien essentiële onderdelen voor het functioneren en de veiligheid van de haard gedemonteerd of verwijderd worden.

In al deze gevallen is de fabrikant niet verantwoordelijk of aansprakelijk voor het product en het recht op reclamatie komt hierdoor te vervallen.

3.1 Maatregelen op het gebied van brandpreventie

Elk gebruik van de haard brengt een zeker risico met zich mee. Neem daarom de volgende instructies nauwkeurig in acht:

- De minimale veiligheidsafstanden tijdens het gebruik van de haard zijn weergegeven in **fig. 1**.
- Zorg ervoor dat er geen meubels of andere brandbare materialen te dicht bij de haard staan. Brandbare materialen mogen nooit binnen 1 meter afstand van de haard geplaatst worden.

- Laat het vuur vanzelf uitgaan. Blus het vuur nooit met water.
- De haard wordt tijdens gebruik warm en kan bij aanraking brandwonden veroorzaken.
- Verwijder de as niet voordat de haard koud is. De as kan smeulende resten bevatten en moet daarom in een onbrandbare bak worden bewaard.
- De as moet naar buiten worden afgevoerd of worden weggegooid op een plek waar geen brandgevaar bestaat.

Bij brand in de schoorsteen

- Sluit alle luiken en ventilatieopeningen.
- Houd de deur van de vlamkast gesloten.
- Controleer of er rook is op zolder en in de kelder.
- Bel de brandweer.
- Voordat u de haard opnieuw in gebruik neemt na een brand, moet een deskundige de haard en de schoorsteen controleren om na te gaan of deze goed werkt.

4.0 Installatie

Let op: controleer voordat u met de installatie begint of de haard onbeschadigd is.
Het product is zwaar! Zorg voor hulp bij het neerzetten en installeren van de haard.

4.1 Vloer

Fundament

Zorg ervoor dat de vloer sterk genoeg is voor de haard. Zie **«2.0 Technische gegevens»** voor gewichten. Aanbevolen wordt om een vloer die niet aan het fundament bevestigd is, een zogenaamde zwevende vloer, bij de installatie te verwijderen.

Brandbare vloerbescherming

Als de haard wordt geplaatst op een brandbare vloer, bedekt u de vloer onder en vóór de haard met een plaat van metaal of ander onbrandbaar materiaal. De aanbevolen minimale dikte is 0,9 mm. **Vloeren van brandbaar materiaal, zoals linoleum, tapijt, enzovoort, moeten onder de vloerplaat worden verwijderd.**

De plaat moet in overeenstemming zijn met nationale wetten en voorschriften.
Neem contact op met de afdeling Bouwtoezicht van uw gemeente voor informatie over beperkingen en installatie-eisen.

4.2 Muren (fig. 1a)

Afstand tot muur van brandbaar materiaal

De haard mag worden gebruikt met een niet-geïsoleerde kachelpijp op voorwaarde dat de afstanden tussen de haard en de muren van brandbare materialen overeenkomen met de gegevens uit **fig. 1**.
Afstand tot muur met geïsoleerde kachelpijp: Zie **fig. 1**

Afstand tot muren beschermd door een brandmuur (fig. 1b en fig. 1c)

Neem contact op met de afdeling Bouwtoezicht van uw gemeente voor informatie over beperkingen en installatie-eisen.

Eis brandmuur
De brandmuur moet minimaal **100 mm** dik zijn en van baksteen, betonsteen of licht beton zijn gemaakt. Andere materialen en constructies met de juiste documentatie mogen ook worden gebruikt.

Afstand tot niet-brandbare muren

Onder niet-brandbaar wordt verstaan een niet-dragende muur van massief metselwerk/beton.

Neem contact op met de afdeling Bouwtoezicht van uw gemeente voor informatie over beperkingen en installatie-eisen.

4.3 Schoorstenen en kachelpijpen

- De haard kan worden aangesloten op een schoorsteen en kachelpijp die zijn goedgekeurd voor met vaste brandstof gestookte apparaten met rookgastemperaturen zoals gespecificeerd in **"2.0 Technische gegevens"**.
- De doorsnede van de schoorsteen moet minimaal even groot zijn als de doorsnede van de kachelpijp. Zie **«2.0 Technische gegevens»** voor het berekenen van de juiste doorsnede van de schoorsteen.
- Als de doorsnede van de schoorsteen groot genoeg is, kunnen er meerdere met vaste brandstof gestookte apparaten op dezelfde schoorsteen worden aangesloten.
- De aansluiting op de schoorsteen moet voldoen aan de installatie-instructies van de leverancier van de schoorsteen.
- Voordat u een opening in de schoorsteen maakt, moet de haard op proef worden gemonteerd om de juiste positie van de haard en het gat in de schoorsteen te kunnen bepalen. Zie **fig. 1** voor minimale afmetingen.
- Zorg dat de kachelpijp helemaal tot aan de schoorsteen omhoog loopt.
- Gebruik een kachelpijpbocht met een veegluik, zodat de pijp kan worden geveegd.

Houd er rekening mee dat het erg belangrijk is dat aansluitingen enigszins flexibel zijn om te voorkomen dat bewegingen in de installatie barsten veroorzaken.

Let op: een juiste en luchtdichte aansluiting is van groot belang voor het goed functioneren van het product.

Schoorsteentrek; Zie «2.0 Technische gegevens». Als de trek te sterk is, kunt u een demper installeren en gebruiken om de trek te regelen.

4.4 Vóór installatie

Het product wordt geleverd in één verpakking.
Controleer na het uitpakken van de kachel of deze niet beschadigd is en of de bedieningshendels functioneren.

4.5 Verwijdering van zelfsluitend mechanisme op deur

Bij levering is het zelfsluitende deurmechanisme vooraf geïnstalleerd. Dit kan indien gewenst worden verwijderd.

Fig. 3

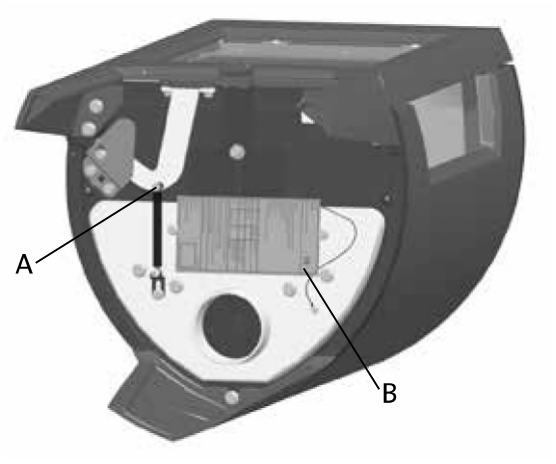

1. Verwijder de bout en de moer **(fig. 3 A)**.
2. Haak de veer los en verwijder deze.

4.6 Aansluiten met een achteraansluiting

Het product is standaard geleverd vanaf de fabriek met een boven aansluiting

NB! Ga alsvolgt te werk voor een installatie voor een achteraansluiting

Fig. 4

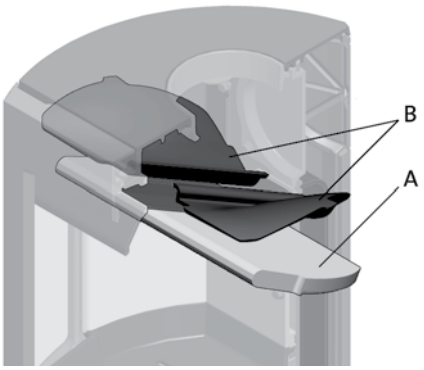

1. Til het schot **(fig. 4 A)** voorzichtig op.
2. Verwijder een van de branderplaten aan de zijkant door deze iets omhoog en vervolgens naar buiten te bewegen. (Wees voorzichtig met gereedschap. De vermiculietplaten kunnen anders beschadigd raken.)
3. Verwijder het schot.
4. Verwijder de andere branderplaat aan de zijkant.
5. Verwijder de uitlaatplaten **(fig. 4 B)**.

Fig. 5

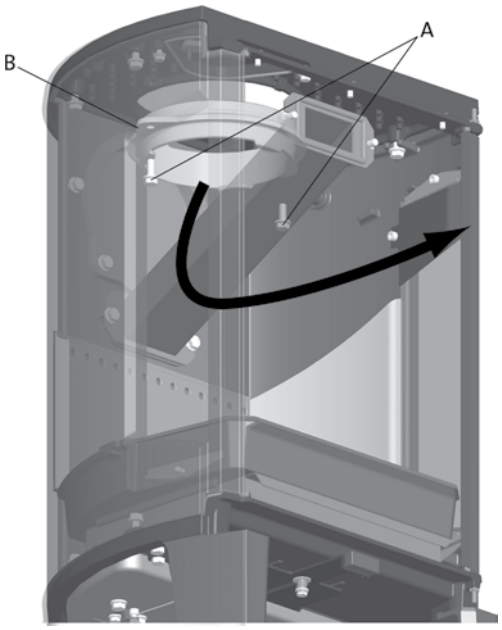

6. Draai de schroeven los **(fig 5 A)** en verwijder de rookgasaansluiting **(fig 5 B)** van de bovenaansluiting aan de binnenzijde van de verbrandingskamer

Fig. 6a

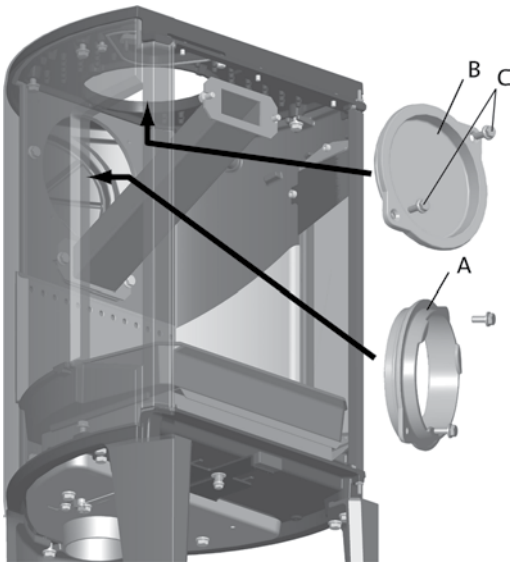

7. Draai de schroeven los **(fig. 6a C)** en verwijder de afdekplaat **(fig. 6a B)** van de achteraansluiting aan de binnenzijde van de verbrandingskamer.

Fig. 6b

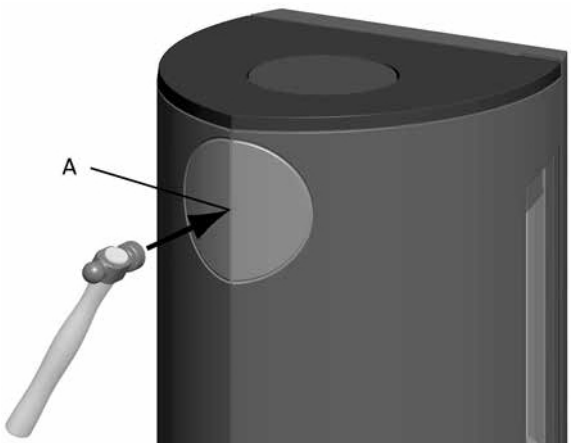

8. Verwijdert de verwijderbare platen **(fig. 6b A)**.
9. Sluit de rookgasaansluiting **(fig. 6a A)** aan de binnenzijde van de verbrandingskamer waar de afdekplaat was.
10. Plaats de afdekplaat **(fig. 6a B)** waar de rookgasaansluiting was.
11. Plaats de rookgasomleidingsplaten **(fig. 4 B)** en de vlamkeerplaar terug **(fig. 4 A)**.

4.7 Controle van de bedieningselementen

Controleer na de plaatsing van het product altijd de bedieningselementen. Deze moeten gemakkelijk beweegbaar zijn en naar behoren functioneren.

De Jøtul F 162, F 163, F 162 C en F 163 C zijn voorzien van de volgende bedieningselementen:

Ontstekingsopening/ventilatieopening

Ontsteking

Fig. 7a

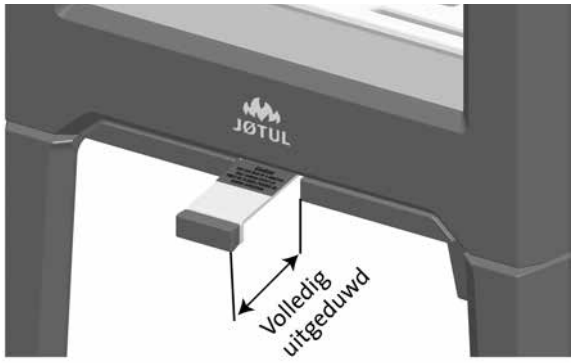

- Open de luchtopening en de ontstekingsopening door de hendels volledig uit te trekken. (Gebruik een handschoen of iets dergelijks om uw hand te beschermen als de hendels warm zijn.)

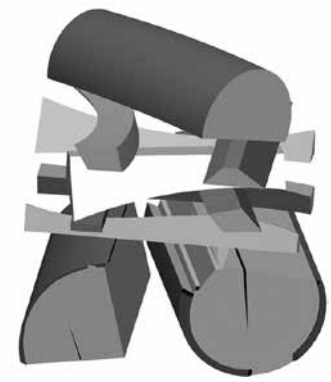

- Plaats twee blokken op de bodem van de verbrandingskamer en stapel het aanmaakhout hier in lagen op.
- Plaats tenslotte een middelgroot blok op deze stapel.
- Plaats 2 of 3 briketten of aanmaakblokken onder de bovenste laag aanmaakhout en steek het vuur aan.

Verwarming

Fig. 7b

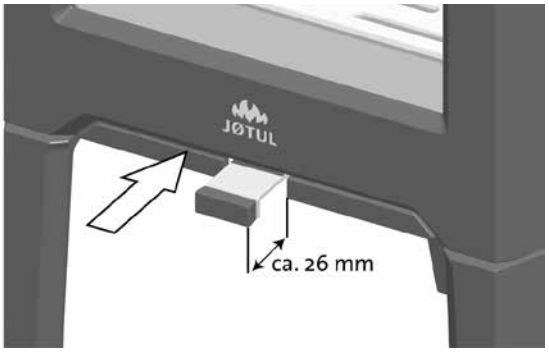

- Schuif de ontstekings-/ventilatieopening **(fig. 7 B)** zo'n 26 mm uit als het hout goed brandt.
- Sluit de deur.
- Daarna kunt u de verbranding reguleren en met behulp van de luchtopening voor meer of minder warmte zorgen.
- Controleer of de naverbranding (secundaire verbranding) goed op gang komt. Dat is het geval als er gele, flikkerende vlammen voor de gaten onder het schot op gang komen.
- Als de luchtstroom normaal is, kunt u de deur sluiten en zal het vuur automatisch branden.

Houtblokken toevoegen

Stook de kachel regelmatig op, maar gebruik alleen kleine hoeveelheden brandstof tegelijk. Als de kachel te vol is, kan de hitte voor extreme druk in de schoorsteen zorgen. Voeg altijd met mate brandstof bij. Vermijd smeulend vuur omdat dit het meest vervuilend is. Het vuur is het beste als het goed brandt en de rook uit de schoorsteen nauwelijks zichtbaar is.

4.7 Gevaar van oververhitting

De haard mag nooit zo gebruikt worden dat er oververhitting ontstaat.

Oververhitting treedt op als de haard te veel brandstof bevat en/of de luchtopening te ver openstaat zodat er te veel hitte wordt ontwikkeld. Een duidelijk teken van oververhitting is dat er onderdelen van de haard rood gloeien. Als dat gebeurt, moet u de luchtopening direct verkleinen.

Vraag om professioneel advies als u vermoedt dat er geen goede trek in de schoorsteen zit (te veel of te weinig trek). Voor meer informatie, zie **«4.0 Installatie» (Schoorsteen en kachelpijp).**

5.0 Dagelijks gebruik

Geur bij eerste gebruik van de haard

Als de haard voor de eerste keer wordt gebruikt, kan irriterend gas vrijkomen dat onaangenaam kan ruiken. Dit gebeurt omdat de verf opdroogt. Het gas is niet giftig, maar toch is het beter om de ruimte goed te ventileren. Stook het vuur flink op totdat alle sporen van gas zijn verdwenen en geen rook of geuren meer zijn waar te nemen.

5.1 Bediening

Brandadvies

NB: Blokken hout die buiten of in een koude ruimte zijn opgeslagen moeten 24 uur voor gebruik naar binnen worden gehaald zodat ze op kamertemperatuur kunnen komen.
Er zijn verschillende manieren waarop in de kachel gestookt kan worden, maar het is belangrijk dat u altijd voorzichtig bent met het materiaal dat u in de kachel stopt. Zie het hoofdstuk **"Houtkwaliteit"**.

Houtkwaliteit

Met kwaliteitshout bedoelen we de meest bekende soorten hout zoals berk, spar en den.
De blokken moeten goed worden gedroogd zodat er niet meer dan 20% vocht in zit.
Om dit te bereiken moet het hout aan het einde van de winter worden gehakt. De blokken moeten worden gekloofd en dusdanig worden gestapeld dat er voldoende ventilatie is. De houtstapel moet worden afgedekt om de blokken tegen regen te beschermen. De blokken moeten begin herfst naar binnen worden gehaald en worden gestapeld/opgeslagen voor gebruik in de komende winter.

Let er goed op dat u de volgende materialen nooit als brandstof voor uw haard gebruikt:
- Huishoudelijk afval, plastic tassen, enz.
- Geverfd of geïmpregneerd hout (dat is uiterst giftig).
- Gelamineerde houten planken.
- Drijfhout

Deze kunnen schade toebrengen aan het product en zijn ook vervuilend.
NB: Gebruik nooit benzine, paraffine, methylalcohol of dergelijke vloeistoffen om het vuur aan te steken. Dit kan leiden tot ernstig persoonlijk letsel en schade aan het product.

Houtverbruik

Houtverbruik met nominale warmteafgifte: ca. **1,6 kg/u**. Een andere belangrijke factor voor het juiste brandstofverbruik is dat de blokken van het juiste formaat zijn. De blokken moeten het volgende formaat hebben:

Aanmaakhout:
Lengte: 23 - 33 cm
Diameter: 2 - 5 cm
Hoeveelheid per vuur: 6 - 8 stuks

Dagelijks gebruik

Brandhout (gehakte blokken):
Lengte: 23 - 33 cm
Diameter: Ongeveer 8 cm
Intervallen voor het aanvullen
van het hout: ongeveer iedere 45 minuten
Grootte van het vuur: 1,2 kg
Hoeveelheid per lading: 2 stuks

De nominale warmteafgifte wordt bereikt wanneer de ventilatieopening ongeveer 57 % is geopend.

Maximum gebruik

Max. lading hout: 2,9 kg/h, max. 3 stukken, 2,2 kg per vulling.

5.2 De as verwijderen

De Jøtul F 162 / F 163 / F 162 C / F 163 C beschikken over een aslade waarmee de as eenvoudig verwijderd kan worden.

Fig. 8

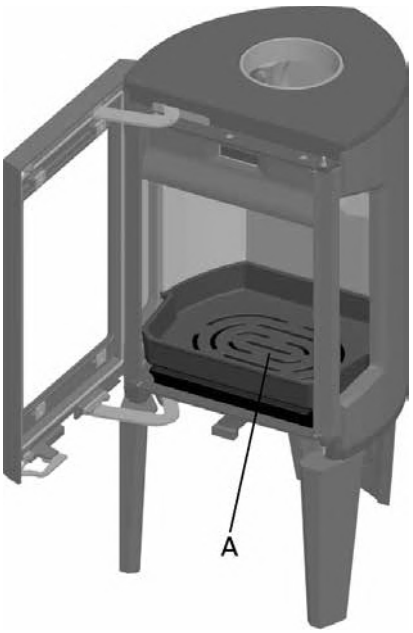

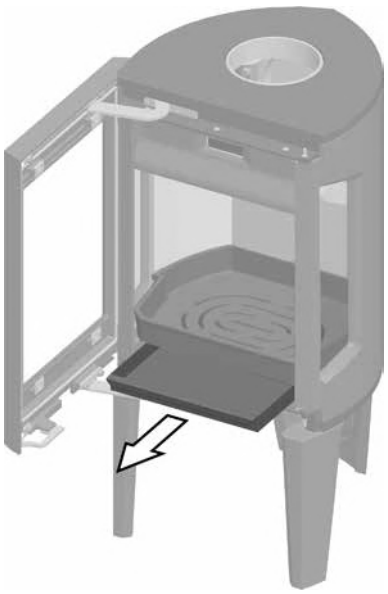

1. Schraap de as door het rooster **(fig. 8 A)** op de basisplaat en in de aslade. Gebruik een handschoen als u de hendel van de aslade vastpakt.
2. Zorg ervoor dat de aslade niet zo vol raakt dat er geen as meer door het rooster de lade in kan.

6.0 Groot onderhoud

Waarschuwing! Het is niet toegestaan dit product zonder toestemming te wijzigen.
Gebruik alleen originele reserveonderdelen.

6.1 Brandplaten/binnenste bodemplaat vervangen

Fig.9

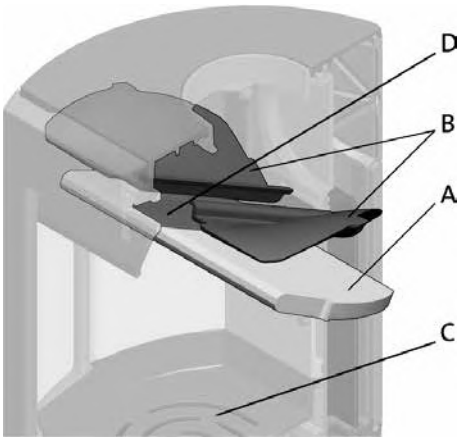

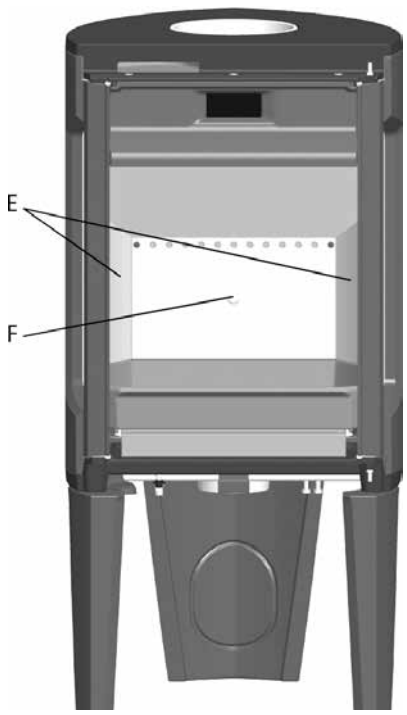

1. Til het schot **(fig.9 A)** voorzichtig op.
2. Verwijder een van de branderplaten aan de zijkant door deze iets omhoog en vervolgens naar buiten te bewegen. (Wees voorzichtig met gereedschap. De vermiculietplaten kunnen anders beschadigd raken.)
3. Verwijder het schot.
4. Verwijder de andere branderplaat aan de zijkant.
5. Draai de M8x25 mm schroef op de achterste brandplaat los **(fig. 9 F)** en verwijder de brandplaat.
6. Vervolgens brengt u de binnenste bodemplaat **(fig. 9 C)** omhoog en verwijdert u deze.

Volg dezelfde procedure als voor de installatie, maar dan in omgekeerde volgorde.

6.2 Keerplaat vervangen

- Volg stap 1-3 onder **fig. 9**.
- U kunt dan makkelijk bij de rookplaten **(fig. 9 B)** als deze verwijderd moeten worden. Deze zitten op een knop op de zijkant en op het luchtverdeelstuk **(fig. 9 D)**.
- Kantel hem omlaag en verwijder hem via de deur.

Voor het terugplaatsen volgt u dezelfde procedure, maar dan in omgekeerde volgorde.

7.0 Onderhoud

7.1 Schoonmaken en verwijderen van roet

Tijdens gebruik kan zich roet afzetten op de binnenwanden van de haard. Roet werkt isolerend en kan daardoor de warmteafgifte van de haard verminderen. Als er zich te veel roet ophoopt, kunt u dit met een roetverwijderaar eenvoudig verwijderen.
Als u wilt voorkomen dat zich roet of een teerlaag ophoopt in de haard, moet u regelmatig flink stoken om de gevormde laag te verwijderen. Een jaarlijkse schoonmaakbeurt van de binnenkant is nodig voor een optimale warmteafgifte van uw product. Het is verstandig dit gelijktijdig te doen met het schoonmaken van de schoorsteen en de kachelpijp.

7.2 Kachelpijpen vegen tot aan de schoorsteen

Kachelpijpen moeten worden geveegd via een veegluik voor de kachelpijp of via de deuropening.
Eerst moet een van de schotten worden verwijderd om dit te kunnen doen.

7.3 Inspectie van de haard

Jøtul raadt u aan om na het reinigen/vegen zelf een grondige inspectie van de haard uit te voeren. Controleer alle zichtbare oppervlakken op scheuren. Controleer ook of alle verbindingsstukken goed zijn afgesloten en of de pakkingen zich in de juiste positie bevinden. Een pakking die tekenen van slijtage of vervorming vertoont, moet worden vervangen.
Maak de groeven van de pakking grondig schoon, breng keramische lijm aan (verkrijgbaar bij uw lokale Jøtul-dealer) en druk de pakking stevig aan. De lijm heeft een korte droogtijd.

7.4 De buitenkant onderhouden

Bij gelakte producten kan er na een paar jaar verkleuring optreden. Voordat u een nieuwe laag verf aanbrengt, moet u het oppervlak reinigen en alle losse deeltjes wegvegen.

8.0 Optionele accessoires

8.1 Pootkap - buitenluchtaansluiting

Art. nr. 51012329

8.2 Spekstenen bovenkant - 50 mm, compleet

Niet voor Jøtul F 162 C / Jøtul F 163 C
Art. nr. 51012327

9.0 Garantie

Jøtul AS biedt haar klanten een garantie van tien jaar inclusief het recht op teruggaaf van externe gietijzeren items ingeval deze defecten vertonen als gevolg van verkeerde materialen en/of fabricage na de initiële aankoop/installatie van de kachel. De koper behoudt het recht goederen terug te geven onder voorwaarde dat de kachel is geïnstalleerd in overeenstemming met huidige wet- en regelgeving en in overeenstemming met de installatie- en bedieningsinstructies van Jøtul.

De garantie dekt niet:

De installatie van optionele extra's, bijv. om de trek in de schoorsteen ter plekke, of de luchttoevoer of andere omstandigheden buiten de invloedssfeer van Jøtul te corrigeren. De garantie dekt geen verbruiksgoederen zoals brandplaten, rookschotten, vuurroosters, bodemroosters, hittebestendig materiaal, dempers en pakkingen, aangezien deze in de loop der tijd achteruitgaan als gevolg van normale slijtage. De garantie dekt geen schade als gevolg van het gebruik van niet-geschikte brandstof bij het ontsteken van het vuur, zoals bijvoorbeeld drijfhout, geïmpregneerd of geverfd hout, plankdelen, chipplaten, enz. Oververhitting kan eenvoudig optreden ingeval van gebruik van niet-geschikte brandstof, d.w.z. dat de kachel gloeiend rood wordt, met als gevolg dat de verf verkleurt en de gietijzeren delen scheuren.

De garantie is niet geldig ingeval van schade tijdens het vervoer van de distributeur naar het afleveradres. De garantie is eveneens niet geldig ingeval van schade als gevolg van het gebruik van niet-originele onderdelen.

Sluttkontroll av ildsteder

Quality control of stoves and fireplaces

Checked Utført	Kontrollpunkt	Controlled item
✓	Alle deler er med i produktet (ifølge struktur).	All parts are included.
✓	Alle festemidler er av korrekt type, og er korrekt anvendt.	Correct fastener items have been used and correctly applied.
✓	Overflater er i samsvar med Jøtuls kvalitetsstandarder.	Surfaces comply with Jøtul workmanship standards.
✓	Lukkemekanismer fungerer som de skal, og uten behov for unødig stor kraft.	Door locking mechanisms function correctly; excessive force is not needed.
✓	Produktet/serien møter kravet for lekkasjetest.	The product/lot complies with the leakage test requirement.
✓	Lakkerte/emaljerte overflater møter kravene i Jøtuls kvalitetsstandarder.	Paint/enamel surface finish complies with Jøtul workmanship standards.
✓	Produktet er fritt for utvendig kitt- eller limklin.	Surfaces are not contaminated by external stove cement or glue.
✓	Produktet har ingen sprekker i glass, støpejern eller andre deler.	There are no cracks in glass, cast iron or other parts.
✓	Pakninger er riktig lagt, og skjemmer ikke produktet ved stygge ender eller ved at pakningen er unødig synlig.	Gaskets are correctly applied and do not degrade product appearance (i.e. loose ends or excessive visible exposure).
✓	Dørpakninger er godt limt.	Door gaskets are firmly glued/fixed to the door.
✓	Dørpakninger har tilfredsstillende pakningstrykk.	Door gaskets provide satisfactory sealing.
✓	Sjekk at det ikke "lyser gjennom" i dørpakning eller andre sammenføyninger.	Check for "light through" at door seals and other relevant locations.
✓	Trekkhendler osv fungerer normalt.	The function of air valve handle etc is normal.

Jøtul bekrefter herved at dette produktet er kontrollert og funnet å være i samsvar med våre kvalitetsnormer.	Jøtul hereby confirm that this product has been QC inspected and found to comply with our quality standards.
Lot. No. / Serie nr. - Checked by / kontrollert av	

Dokument nr. KIS-580 02 03

Jøtul pursue a policy of constant product development. Products supplied may therefore differ in specification, colour and type of accessories from those illustrated and described in the brochure.

Jøtul vise sans cesse à améliorer ses produits. C'est pourquoi, il se réserve le droit de modifier les specifications, couleurs et équipements sans avis prélable.

Cat.no. 10050789-P00
Jøtul AS, Feb. 2016

Quality
Jøtul AS has a quality system that conforms to NS-EN ISO 9001 for product development, manufacturing, and distribution of stoves and fireplaces. This policy gives our customers quality and safety piece of mind as a result of Jøtul's vast experience dating back to when the company first started in 1853.

Qualité
Le système de contrôle de la qualité de Jøtul AS est conforme à la norme NS-EN ISO 9001 relative à la conception, à la fabrication et à la distribution de poêles, poêles et inserts. Cette politique nous permet d'offrir à nos clients une qualité et une sécurité reposant sur la vaste expérience accumulée par Jøtul depuis sa création en 1853.

Jøtul AS,
P.o. box 1411
N-1602 Fredrikstad,
Norway
www.jotul.com

DESIGN STATEMENT

See also Planning Policy statement by Bidwells

Looking west from site towards Lawers Range

Looking North West from site to Balnearn

Looking North to Fearnan and the Glen Lyon Hills beyond

Looking East towards Kenmore

Callelochan

Rock House at Achianich

CASA has already replaced two other houses in the vicinity. To the West at Callelochan and to the East at Achianich, These replacement houses on similar elevated sites successfully and sensitively fit into the landscape.

casa

colin . andrew . smith . architect
treetops . dull
aberfeldy . perthshire . PH15 2JQ
01887 820815
colin@casarchitect.co.uk

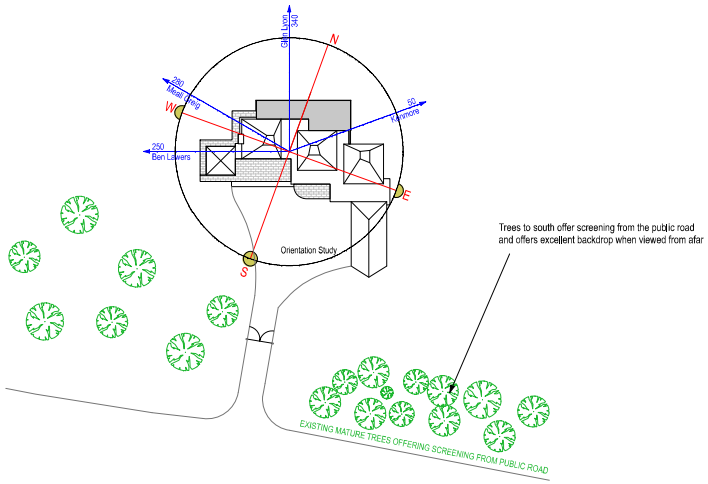

Allt Nan Cno Farm stead to the North West

Farm stead to the immediate North of the site

Proposed site of replacement house

Former Kepranich House to be replaced

SITE and CONTEXT:

The proposed site is located on the South side of Loch Tay mid way between Achianich and Callelochan. It sits at some 100m above the Loch level and in a location which offers prominant views to the Lawers Range to the West, Fearnan and the Glen Lyon Range to the North and Kenmore to the East, nearby there is the remains of a historical but now ruinous house which the proposed house seeks to replace. The above 1867 map depicts the historical buildings which once stood in this landscape which the design of this house seeks to interpret in a contemporary architectural manner.

BRIEF:
To design a house that is bespoke to its location and responding to its site and outlook. A house befitting of the applicants landholding. This house should be of its time, distinctive in design and architectural expression but remaining sensitive to the site and its special surrounding landscape. In addition to current needs the house should anticipate future ones.

DESIGN SOLUTION:
The house is set to the edge of the existing flat area of ground to the South to provide a sheltered southerly courtyard.
The overall design is proposed to be on one level to keep it low profile and has been broken into a number of parts, reducing the perceived bulk. This strategy has been used for generations of buildings in the countryside throughout Scotland and indeed the historical remains of this type of collection of buildings can be found in a ruinous farmsteads which once existed to the North and West of the site. In effect a reinterpretation of a farm grouping.

The pyramidal roofs echo the mountain ranges beyond and being truncated with rooflights allow sunlight to penetrate the deepest parts of the house giving light and solar gains. These roofs have all been orientated differently to capture light in different parts of the house throughout the day. The overall effect heightens the presence in the wider landscape.

Simplicity and longevity are the key to this house. The materials used are of the highest quality: patinated zinc for the roof finish separated with turf flat roofs and the walls clad in blackened timber. The intention is to create a contemporary building that is in sympathy with its surroundings being seamless and recessive in colour.

The existing mature trees to the south of the site are planned to be retained offering an excellent mature screening to the development. This along with the low profile design ensures visual compatibility with its location.

Careful consideration has been given to PAN 72 in the design of the house, making best use of the available flat area of land, the house has been orientated to provide views and to maximise solar gains in the living areas, and the entrance is situated in a sheltered location away from the prevailing wind. The house design is uniquely suited to this site, an innovative contemporary design solution as aspired in PAN 72.

ECO-CREDENTIALS OF PROPOSED HOUSE

1.0 Super insulated and air tight building fabric to reduce need for energy
2.0 Renewable heat pump heating system with underfloor low energy output
3.0 Triple glazed windows with u values as low as 0.7
4.0 Orientated to maximise solar gains.
5.0 Thermal mass with the use of solid floors.
6.0 Materials carefully chosen for low embodied energy, used in their natural state.

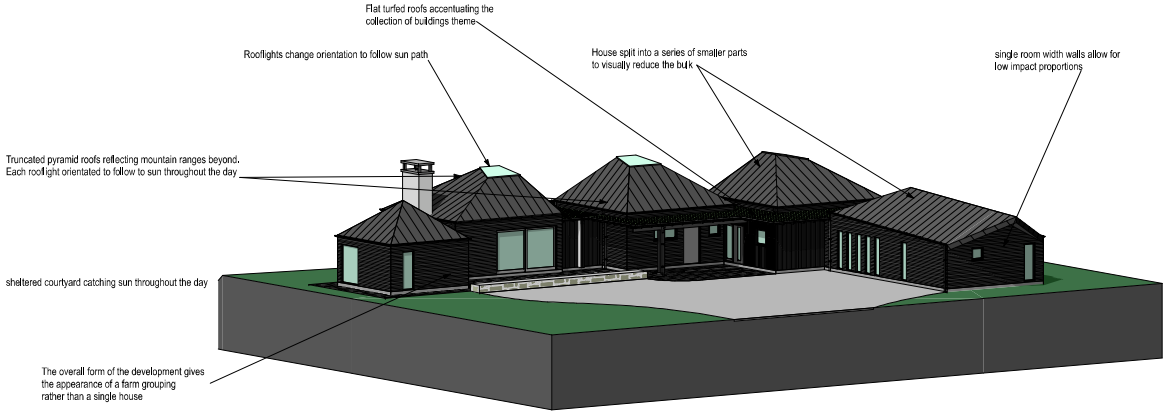

VIEW FROM SOUTH

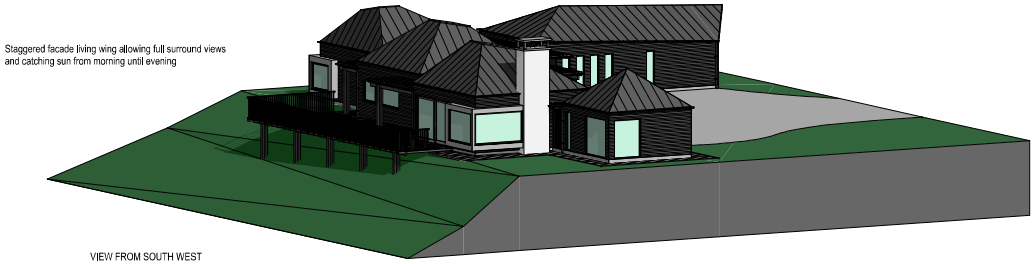

VIEW FROM SOUTH WEST

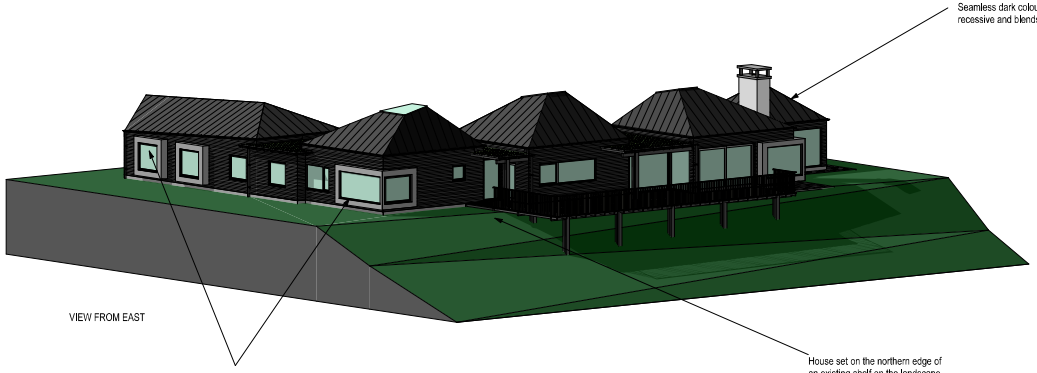

VIEW FROM EAST

Amendments:

Replacement House at Kepranich
South Loch Tay
PH15 2HU

for:	Anton S Flotats
status:	Planning
title:	Design Statement
drawing no:	309-04P
scale:	nts @ A2
Date	January 2021

Copyright by CASA - All rights reserved

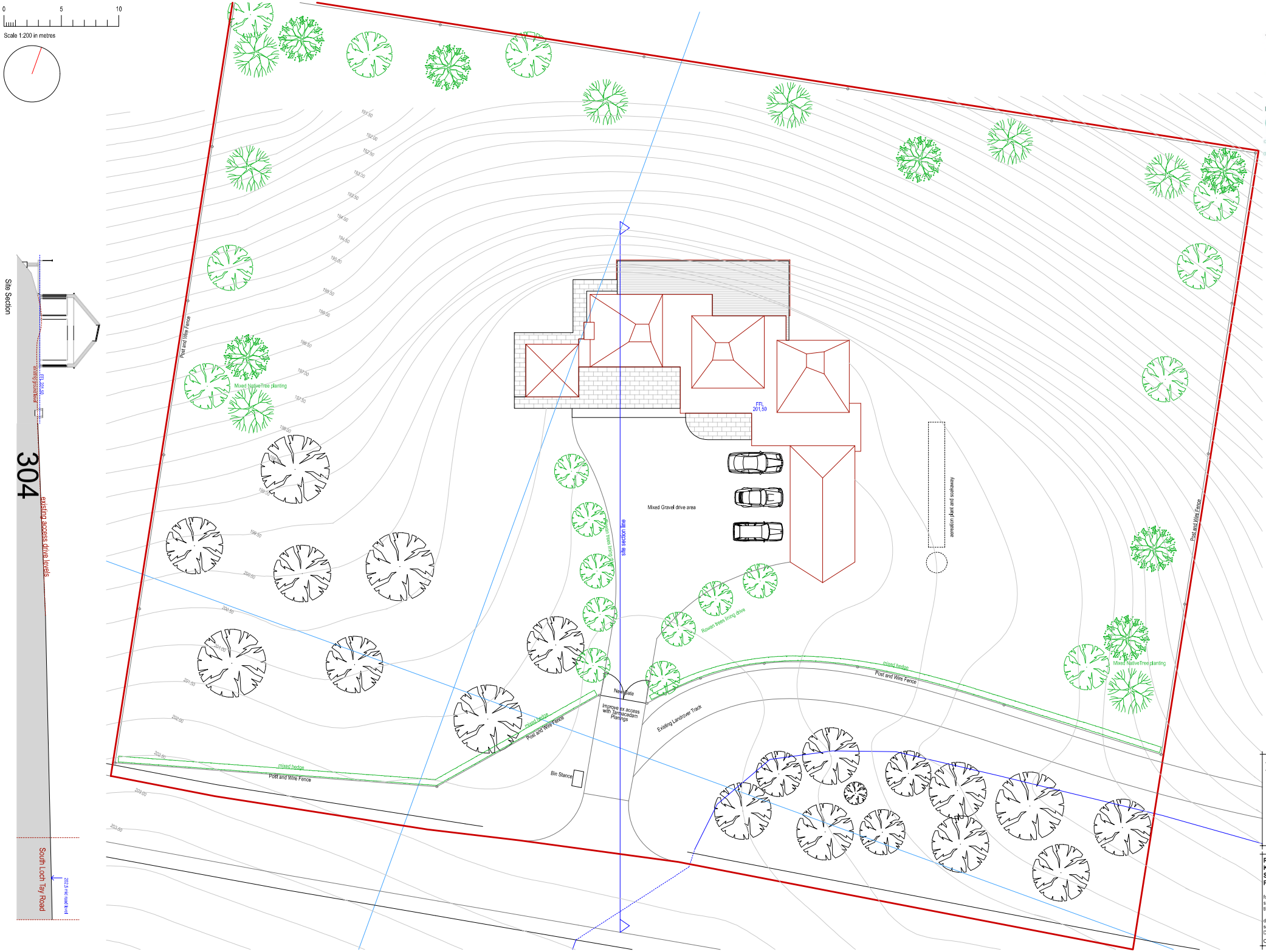

Amendments:
A-Site Section Added

Replacement House at
Kepranich
South Loch Tay
PH15 2HU

for:	Antoni S Flotsats
status:	Planning
title:	Proposed Site and Landscape Plan
drawing no:	304-01P
scale:	1:200 @ A2
Date	January 2021

Copyright by CASA - All rights reserved

LRB-2021-18
Planning Application – 21/00277/FLL – Erection of a dwellinghouse, land 170 metres north west of Tom Na Moine, Acharn

REPRESENTATIONS

M e m o r a n d u m

To	Development Quality Manager	From	Regulatory Service Manager
Your ref	21/00277/FLL	Our ref	MA
Date	22 March 2021	Tel No	

The Environment Service **Pullar House, 35 Kinnoull Street, Perth PH1 5GD**

Consultation on an Application for Planning Permission

RE: Erection of a dwellinghouse Land 170 Metres North West Of Tom Na Moine Acharn for Mr Antoni S Flotats

I refer to your letter dated 19 March 2021 in connection with the above application and have the following comments to make.

Water (assessment date – 22/3/21)

Recommendation
I have no objections to the application but recommend the undernoted condition and informatives be included in any given consent.

Comments

The development is for a dwelling house in a rural area with private water supplies believed to serve properties in the vicinity. To ensure the new development has an adequate and consistently wholesome supply of water and to maintain water quality and supply in the interests of residential amenity and ensure the private water supply or septic drainage systems of neighbours of the development remain accessible for future maintenance please note the following condition and informatives. It should be noted that once the development is operational this Service may have statutory duties detailed in the Water Intended for Human Consumption (Private Supplies) (Scotland) Regulations 2017 to monitor the water quality. No public objections relating to the water supply were noted at the date above.

WS00 Condition

Prior to the commencement of the development hereby approved, details of the location and measures proposed for the safeguarding and continued operation, or replacement, of any septic tanks and soakaways, private water sources, private water supply storage facilities and/or private water supply pipes serving properties in the vicinity, sited within and running through the application site, shall be submitted to and approved in writing by the Council as Planning Authority. The subsequently agreed protective or replacement measures shall be put in place prior to the development being brought into use and shall thereafter be so maintained insofar as it relates to the development hereby approved.

WAYL - Informative 1

The applicant should ensure that any existing wayleaves for maintenance or repair to existing private water supply or septic drainage infrastructure in the development area are honoured throughout and after completion of the development.

PWS - Informative 2

The applicant shall ensure the private water supply for the dwellinghouse/ development complies with the Water Scotland Act 1980 (Section 63), The Private Water Supplies (Scotland) Regulations 2006 and The Water Intended for Human Consumption (Private Supplies) (Scotland) Regulations 2017. Detailed information regarding the private water supply, including the nature, location and adequacy of the source, any storage tanks/ pipework and the filtration and disinfection treatment proposed to ensure provision of an adequate and consistently wholesome water supply shall be submitted to Perth and Kinross Council Environmental Health in line with the above Act and Regulations.

Comments to the Development Quality Manager on a Planning Application

Planning Application ref.	21/00277/FLL	**Comments provided by**	Dean Salman Development Engineer
Service/Section	Transport Planning	**Contact Details**	
Description of Proposal	Erection of a dwellinghouse		
Address of site	Land 170 Metres North West Of Tom Na Moine, Acharn		
Comments on the proposal	Insofar as the Roads matters are concerned, I have no objections to this proposal on the following condition.		
Recommended planning condition(s)	Prior to the development hereby approved being completed or brought into use, the vehicular access shall be formed in accordance with Perth & Kinross Council's Road Development Guide Type A Figure 5.5 access detail, of Type B Road construction detail. Reason - In the interests of road safety; to ensure an acceptable standard of construction within the public road boundary.		
Recommended informative(s) for applicant	The applicant should be advised that in terms of Section 56 of the Roads (Scotland) Act 1984 they must obtain from the Council as Roads Authority consent to open an existing road or footway prior to the commencement of works. Advice on the disposal of surface water must be sought at the initial stages of design from Scottish Water and the Scottish Environmental Protection Agency.		
Date comments returned	06 April 2021		

Comments to the Development Quality Manager on a Planning Application

Planning Application ref.	21/00277/FLL	**Comments provided by**	Lucy Sumner
Service/Section	Strategy & Policy	**Contact Details**	**Development Contributions Officer:** Lucy Sumner
Description of Proposal	Erection of a dwellinghouse		
Address of site	Land 170 Metres North West Of Tom Na Moine Acharn		
Comments on the proposal	**NB: Should the planning application be successful and such permission not be implemented within the time scale allowed and the applicant subsequently requests to renew the original permission a reassessment may be carried out in relation to the Council's policies and mitigation rates pertaining at the time.** THE FOLLOWING REPORT, SHOULD THE APPLICATION BE SUCCESSFUL IN GAINING PLANNING APPROVAL, MAY FORM THE BASIS OF A SECTION 75 PLANNING AGREEMENT WHICH MUST BE AGREED AND SIGNED PRIOR TO THE COUNCIL ISSUING A PLANNING CONSENT NOTICE. **Primary Education** With reference to the above planning application the Council Developer Contributions Supplementary Guidance requires a financial contribution towards increased primary school capacity in areas where a primary school capacity constraint has been identified. A capacity constraint is defined as where a primary school is operating at over 80% and is likely to be operating following completion of the proposed development, extant planning permissions and Local Development Plan allocations, at or above 100% of total capacity. This proposal is within the catchment of Kenmore Primary School. Education & Children's Services have no capacity concerns in this catchment area at this time.		
Recommended planning condition(s)	**Summary of Requirements** Education: £0 **Total: £0**		
Recommended informative(s) for applicant			
Date comments returned	08 April 2021		

M e m o r a n d u m

To Development Quality Manager	From Regulatory Services Manager
Your ref 21/00277/FLL	Our ref LRE
Date 13 April 2021	Tel No

Communities

Pullar House, 35 Kinnoull Street, Perth PH1 5GD

Consultation on an Application for Planning Permission
21/00277/FLL RE: Erection of a dwellinghouse Land 170 Metres North West of Tom Na Moine Acharn for Mr Antoni S Flotats

I refer to your letter dated 19 March 2021 in connection with the above application and have the following comments to make.

Environmental Health
Recommendation
I have no objection in principle to the application but recommend the under noted condition and informative be included on any given consent.

Comments
This application is for the erection of a dwellinghouse and plans indicate that the applicant proposes to install an air source heat pump and stove.

The closest residential property to the dwellinghouse is approximately 170 metres away.
Air Source Heat Pump(ASHP)
Noise
The applicant has submitted information on the ASHP for NIBE F2040-8, F2040-12 and F2040 -16 and the corresponding sound pressure levels at 10metres from the units are 26db(A), 29dB(A) and 33dB(A). The applicant has not highlighted which model is to be installed so therefore, assuming the 33dB(A) in calculations give the worst-case scenario.

The World Health Organisation (WHO) issued guidance in 1999 in relation to noise, at which time it was recommended that the following sound levels should be maintained: L_{eq}50-55dB (A) in outdoor living areas, L_{eq}35dB (A) in internal living areas and L_{eq}30dB (A) in bedrooms. This guidance is consistent with BS8233:1999 which recommends the following sound level ranges: L_{eq}30-40dB (A) in living areas and L_{eq}30-35dB (A) in bedrooms.

Given the distance attenuation from the unit to the nearest existing residential property these levels are achievable for airborne noise allowing for 10-15dB reduction by a partially open window.

The sound levels recommended in the guidance do not consider the relative noise level at octave frequency bands. Fixed plant of this type can create noise which has characteristics that are not adequately quantified by means of a L_{eq} limit. I recommend that a condition, based on Noise Rating, be included on any given consent to protect residential amenity.

Stove
Air Quality

The applicant has submitted information of the stove to be installed
The Environment Act 1995 places a duty on local authorities to review and assess air quality within their area. Technical Guidance LAQM.TG (16) which accompanies this act advises that biomass boilers within the range of 50kW to 20MW should be assessed in terms of nitrogen dioxide and particulate matter. The pollution emissions of concern from biomass are particulate matter (PM_{10}/$PM_{2.5}$) and nitrogen oxides (NOx).

The applicant has submitted information on stove to be installed, which will be out with the range to be assessed so I have no adverse comments to make with regards to air quality.

Nuisance
This Service has seen an increase in nuisance complaints with regards to smoke and smoke odour due to the installation of biomass appliances. Nuisance conditions can come about due to poor installation and maintenance of the appliance and inadequate dispersion of emissions due to the inappropriate location and height of flue with regards to surrounding buildings.

The stove exhaust is through a chimney which terminates at roof height therefore, emissions should adequately disperse and given the distance to neighbouring residential property nuisance conditions should not arise.

I would advise that smoke/odour could be further minimised using fuel recommended by the manufacturer, therefore I recommend that the undernoted informative be included on any given consent.

Condition
EH11 All plant or equipment shall be so enclosed, attenuated and/or maintained such that any noise therefrom shall not exceed Noise Rating 35 between 0700 and 2300 hours daily, or Noise Rating 20 between 2300 and 0700 hours daily, within any neighbouring residential property, with all windows slightly open, when measured and/ or calculated and plotted on a rating curve chart.

Informative

- The approved stove system shall be installed and thereafter operated and maintained in accordance with the manufacture's recommendations, such that smoke odours are not exhausted into or escape into any neighbouring dwellings. Failure to do so may result in an investigation and possible action by Environmental Health under the Environmental Protection Act 1990.